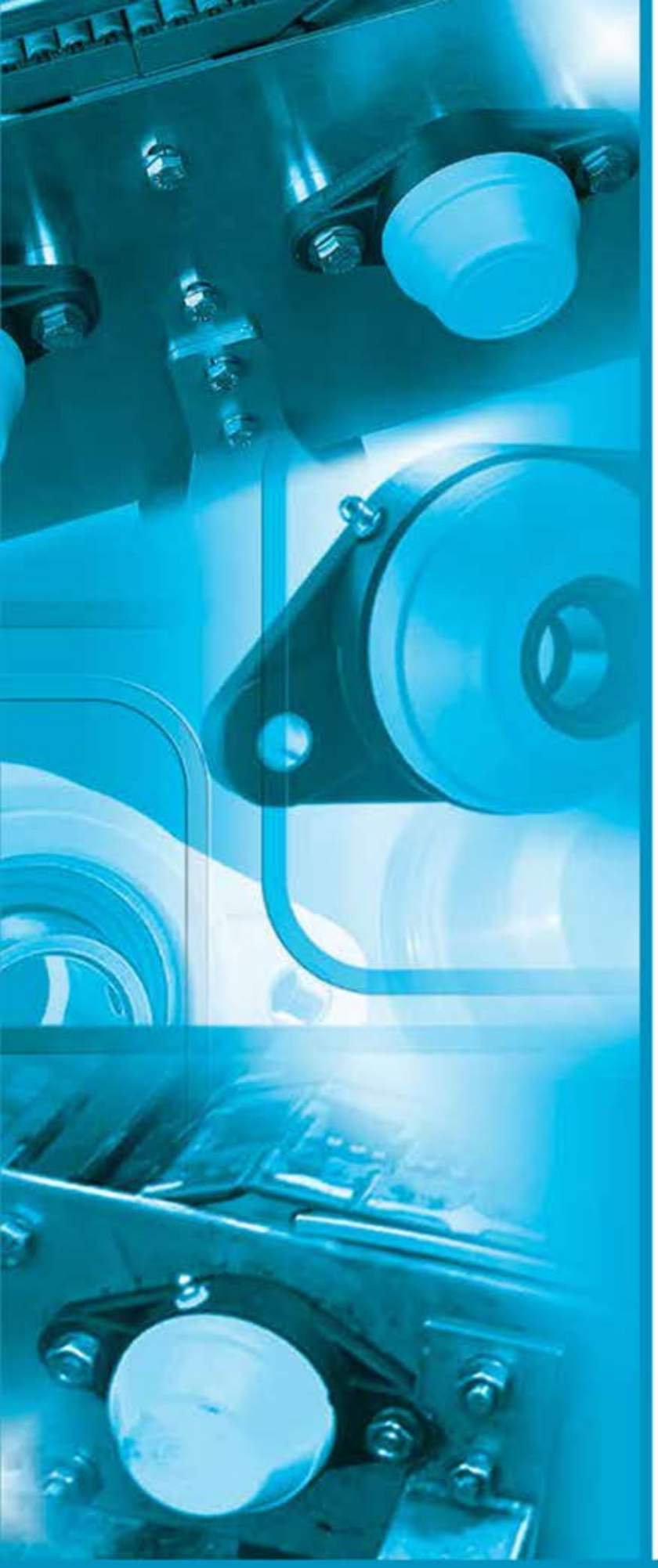

SYSTEM PLAST™

Mounted Bearing Supports

Time-tested Brand Performance

Power Transmission Solutions is a family of respected product brands that supply a variety of power transmission components designed to increase both uptime and productivity. Each of our brands brings years of time-tested reliability and proven performance results. Together they deliver a product line unparalleled in its breadth.

Browning

Founded in 1886, Browning is the world leader in V-belt drives and helical shaft-mounted speed reducers. Browning also offers a broad range of other products, including gearing, mounted ball bearings, mounted roller bearings and sprockets.

JAURE

Founded in 1958 in Spain, Jaure is a leader in the European marketplace. Jaure provides highly engineered couplings for industries ranging from steel and paper, hoisting to windmills and marine applications.

KOP-FLEX

Founded in 1920, Kop-Flex brings over 80 years of design and application experience to a wide range of industries. Kop-Flex products include gear, disc and resilient shaft couplings.

McGILL

Founded in 1905, McGill patented the CAMROL® cam-follower bearing, which today is offered in more than 1,400 different combinations and configurations. McGill products also include aerospace bearings, needle and spherical bearings.

Morse

Founded in 1880, Morse is well known for its performance-proven roller-chain drives, clutches, worm-gear speed reducers and couplings.

ROLLWAY

Founded in 1908, Rollway provides over 2,000 different types of cylindrical roller bearings, cylindrical and tapered thrust bearings and extra-large roller bearings.

SEALMASTER

Founded in 1935, Sealmaster is the industry's preferred bearing product, known for its premium-quality mounted ball-bearing line, as well as its mounted roller bearings.

SYSTEM PLAST

Founded in 1985, System Plast S.p.A. is a global supplier of steel and engineered plastic conveying chains and chain tracks, modular plastic belts, composite housed bearings and Valu Guide® conveyor components and guide rails.

Table of Contents

Introduction 3

Selection Guide 4

Product Overview 6

Nomenclature 7

Features & Benefits 8

Product Tables 10

Engineering Section 37

CRES

CORROSION RESISTANT ENGINEERED SOLUTIONS

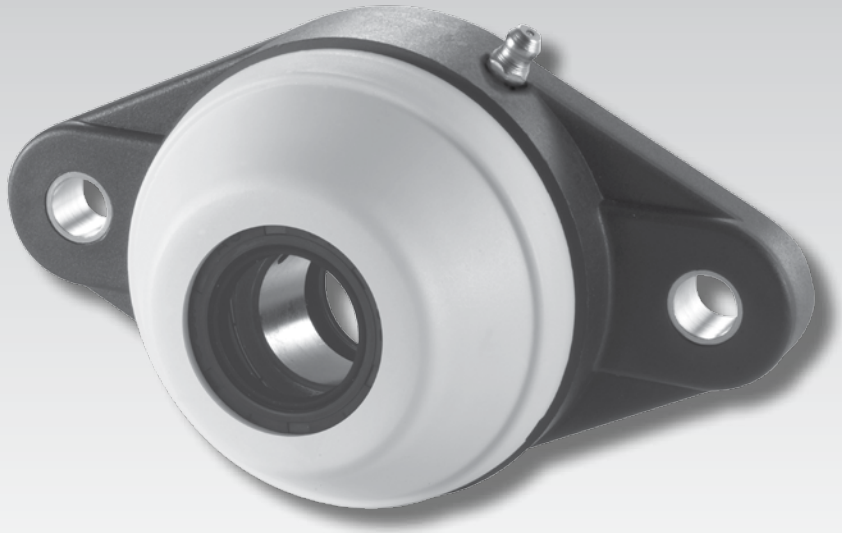

Mounted Ball Bearing Supports

Modular bearing assembly for harsh wash down environments often found in food and beverage processing consisting of sealed and lubricated inch and metric bearing contained with a variety of housing styles, mounted styles and housing materials with optional end caps and back seals. Mounted ball bearing supports provide an anti-friction solution when supporting rotating shafts with radial loads.

Housing Styles

Flanges, Pillow Block and Take Up Assemblies

Bearing Insert Materials

400 Series Stainless Steel, Chrome Steel AISI 52100

Locking Styles

Setscrew

Bore Diameter Size Range

¾” to 1 ½” And 20 mm to 40 mm

Housing Materials

Polyamide, Nolu®-Clean

Mounted Ball Bearing Support Selection Guide

Brand	Image	Series	Housing Style	Lock Type	Housing Material	Bearing Material
System Plast		UCFQ	Four Bolt Flange	Setscrew	Polyamide	AISI 52100 Chrome Steel -or- 400 Series Stainless Steel
					Nolu®-Clean	
		UCFH	Two Bolt Flange		Polyamide	
					Nolu®-Clean	
		UCFB	Flange Bracket		Polyamide	
					Nolu®-Clean	
		UCFG	Three Bolt Flange		Polyamide	
		UCP	Pillow Block			
					Nolu®-Clean	
		UCPA	Tapped Base		Polyamide	
					Nolu®-Clean	
		UCT	Take Up		Polyamide	
		UC	-		-	

Standard Seal	Accessory Option	Size Range: Inch	Size Range: Metric	Section Name	Pages
Single Lip Contact Seal	Back Spring Seal and End Cap	3/4” - 1 1/2”	20 - 40 MM	System Plast Mounted Bearing Supports	10
					12
		3/4” - 1 1/2”	20 - 40 MM		14
					16
		3/4” - 1 1/4R”	20 - 30 MM		18
					20
		1” - 1 1/4R”	25 - 30 MM		22
		3/4” - 1 1/2”	20 - 40 MM		24
					26
		3/4” - 1 1/4R”	20 - 30 MM		28
					30
		3/4” - 1 1/4R”	20 - 30 MM		32
	-	3/4” - 1 1/2”	20 - 40 MM		34

System Plast Mounted Ball Bearing Supports

System Plast mounted ball bearing supports feature multiple housing styles, configurations and materials. The extended inner race bearing insert is available in AISI 52100 chrome steel or 400 series stainless steel with setscrews and features a single lip contact seal. An optional back housing spring seal and end cap provides a good balance between contaminant resistance, grease loss and friction. As illustrated on the following pages, these bearings are available in inch or metric bore with a wide variety of housings in both polyamide and Nolu®-Clean materials.

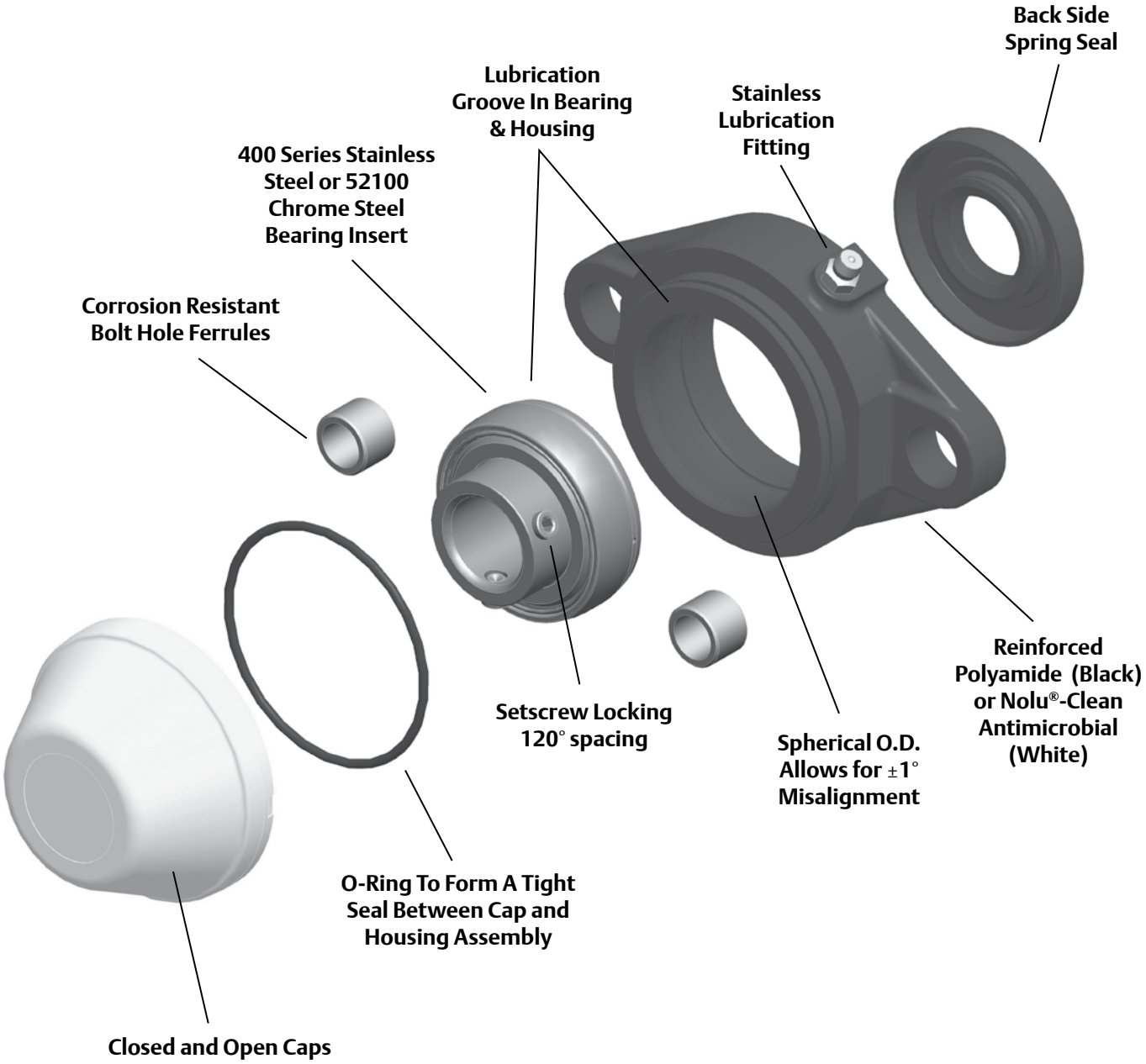

System Plast Mounted Ball Bearing Supports Nomenclature

Housing* (see table below)

Bearing Series

Bore Size * * (see table below)
- Metric: if includes M then metric bore
- Example: 25M = 25 mm
- Inch: if two digit only, xx, then xx/16 = size
- Example: 20/16 = 1 1/4

Insert Material
- Blank - 52100 Chrome Steel
- SS - Stainless Steel

Housing Material
- Blank - Black Polyamide
- NC - White Nolu®-Clean

Accessories
- Blank - None
- CEC - Closed End Cap & Back Spring Seal
- OEC - Open End Cap & Back Spring Seal

UCFQ206-20-SS-NC-CEC

* Housing Type	Description
UCFQ	4 Bolt Flange
UCFH	2 Bolt Flange
UCFB	Flange Bracket
UCFG	3 Bolt Flange
UCP	Pillow Block
UCPA	Tapped Based PB
UCT	Take Up

* * Bore Size	Description
12	3/4”
16	1”
19	1 3/16”
20	1 1/4”
23	1 7/16”
24	1 1/2”
20M	20mm
25M	25mm
30M	30mm
35M	35mm
40M	40mm

Features and Benefits

Housing Material

Reinforced Polyamide

Black housings are made of a reinforced polyamide material with solid back housing designs.

Nolu®-Clean Antimicrobial

White housings are made of a reinforced polyamide material with solid back housing design with an antimicrobial material for improved hygiene. Nolu-Clean bearings will help equipment builders meet the requirements of the USDA and other government agencies as they relate to the prevention of contamination of food products and the growth of bacteria.

Bearing Races

400 Series Stainless

400 series stainless steel races with annealed setscrew holes, stainless steel setscrews and stainless ball riding cage with 400 series stainless balls.

52100 Chrome Steel

Chrome Steel Races made of AISI 52100 steel.

Features and Benefits continued

Locking

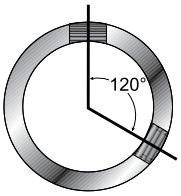

Setscrew
120° spaced, balanced three point contact minimizes inner ring distortion vibration, reduces noise, and improves reliability.

Sealing
Single lip contact seal.

Accessories
Back side seal.

Snap on end cap
Optional end caps to provide protection in harsh wash down environments are available in safety yellow for polyamide housing designs and Nolu®-Clean white for Nolu-Clean housing assemblies in closed and open-through shaft with spring seal designs.

Lubrication
H1 USDA compliant food grade grease.

Identification
System Plast mounted ball bearing supports are laser marked with the product description for easy identification.

Duty: Standard
Rolling Elements: Ball
Bearing Material: 52100 Chrome Steel or 400 Series Stainless Steel
Housing: Black Polyamide
Self-Alignment: ± 1°
Lock: Setscrew
Bearing Seal: Single Lip Contact
Back Seal: Spring Seal
End Cap: Yellow Protective Cap
Temperature: 30° to 180°F (0° to 82°C)

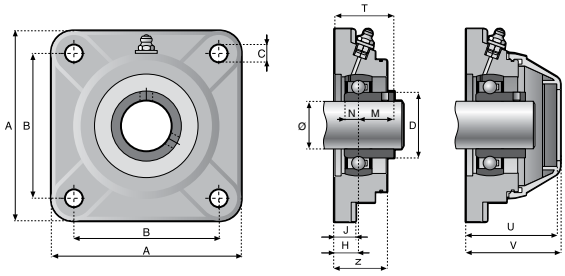

This UCFQ style mounted bearing uses external fitting caps.

UCFQ Series Four Bolt Flange - Polyamide - Setscrew Locking - External Fit Safety Cap

Bore Diameter		52100 Chrome Steel Bearing Insert		
		Optional Safety Cap	Sealed Closed Cap	Sealed Open Cap
inch	mm	Part Description	Part Description	Part Description
3/4	-	UCFQ204-12	UCFQ204-12-CEC	UCFQ204-12-OEC
-	20	UCFQ204-20M	UCFQ204-20M-CEC	UCFQ204-20M-OEC
1	-	UCFQ205-16	UCFQ205-16-CEC	UCFQ205-16-OEC
-	25	UCFQ205-25M	UCFQ205-25M-CEC	UCFQ205-25M-OEC
1 3/16	-	UCFQ206-19	UCFQ206-19-CEC	UCFQ206-19-OEC
1 1/4R	-	UCFQ206-20	UCFQ206-20-CEC	UCFQ206-20-OEC
-	30	UCFQ206-30M	UCFQ206-30M-CEC	UCFQ206-30M-OEC
1 1/4	-	UCFQ207-20	-	-
1 7/16	-	UCFQ207-23	UCFQ207-23-CEC	UCFQ207-23-OEC
-	35	UCFQ207-35M	UCFQ207-35M-CEC	UCFQ207-35M-OEC
1 1/2	-	UCFQ208-24	UCFQ208-24-CEC	UCFQ208-24-OEC
-	40	UCFQ208-40M	UCFQ208-40M-CEC	UCFQ208-40M-OEC

Bore Diameter		Dimensions inch / mm					
		A	B	C	D	H	J
inch	mm						
3/4	-	3 25/64	2 1/2	7/16	1 1/8	39/64	25/64
-	20	86.1	63.5	10.9	28.4	15.5	9.9
1	-	3 3/4	2 3/4	7/16	1 11/32	43/64	1/2
-	25	95.0	70.1	10.9	34.0	17.0	12.2
1 3/16	-	4 1/4	3 1/4	7/16	1 9/32	9/16	1/2
1 1/4R	-						
-	30	108.0	82.6	10.9	32.5	14.5	12.2
1 1/4	-	4 5/8	3 5/8	35/64	1 27/32	23/32	5/8
1 7/16	-						
-	35	118.1	91.9	14.0	46.7	18.0	15.7
1 1/2	-	1 3/16	4	35/64	2 1/16	23/32	5/8
-	40	132.1	101.6	14.0	52.6	18.0	15.7

UCFQ Series Four Bolt Flange - Polyamide - Setscrew Locking - External Fit Safety Cap

Bore Diameter		Stainless Steel Bearing Insert		
		Optional Safety Cap	Sealed Closed Cap	Sealed Open Cap
inch	mm	Part Description	Part Description	Part Description
3/4	-	UCFQ204-12-SS	UCFQ204-12-SS-CEC	UCFQ204-12-SS-OEC
-	20	UCFQ204-20M-SS	UCFQ204-20M-SS-CEC	UCFQ204-20M-SS-OEC
1	-	UCFQ205-16-SS	UCFQ205-16-SS-CEC	UCFQ205-16-SS-OEC
-	25	UCFQ205-25M-SS	UCFQ205-25M-SS-CEC	UCFQ205-25M-SS-OEC
1 3/16	-	UCFQ206-19-SS	UCFQ206-19-SS-CEC	UCFQ206-19-SS-OEC
1 1/4R	-	UCFQ206-20-SS	UCFQ206-20-SS-CEC	UCFQ206-20-SS-OEC
-	30	UCFQ206-30M-SS	UCFQ206-30M-SS-CEC	UCFQ206-30M-SS-OEC
1 1/4	-	UCFQ207-20-SS	-	-
1 7/16	-	UCFQ207-23-SS	UCFQ207-23-SS-CEC	UCFQ207-23-SS-OEC
-	35	UCFQ207-35M-SS	UCFQ207-35M-SS-CEC	UCFQ207-35M-SS-OEC
1 1/2	-	UCFQ208-24-SS	UCFQ208-24-SS-CEC	UCFQ208-24-SS-OEC
-	40	UCFQ208-40M-SS	UCFQ208-40M-SS-CEC	UCFQ208-40M-SS-OEC

Bore Diameter		Dimensions inch / mm									Weight (lbs/kgs)
inch	mm	M	M Stainless	N	N Stainless	T	T Stainless	U	V	Z	
3/4	-	23/32	23/32	9/32	19/64	1 21/64	1 21/64	1 7/8	1 61/64	1	0.51
-	20	18.3	18.3	7.11	7.6	33.8	33.8	47.5	49.5	25.9	0.23
1	-	49/64	25/32	19/64	19/64	1 7/16	1 7/16	2 1/16	2 1/8	1 9/64	0.75
-	25	19.6	19.8	7.6	7.6	36.6	36.8	52.3	54.1	29.0	0.34
1 3/16	-	7/8	7/8	5/16	11/32	1 7/16	1 29/64	2	2 1/16	1 9/64	1.10
1 1/4R	-										
-	30	22.1	22.1	7.9	8.9	36.6	36.8	50.8	52.6	29.0	0.50
1 1/4	-	1	1	3/8	3/8	1 23/32	1 23/32	2 1/2	2 19/32	1 19/64	1.43
1 7/16	-										
-	35	25.4	25.4	9.4	9.7	43.4	43.4	63.8	65.8	33.0	0.65
1 1/2	-	1 3/16	1 3/16	11/32	7/16	1 57/64	1 57/64	2 1/2	2 9/16	1 3/8	1.81
-	40	30.2	30.2	8.9	10.9	48.0	48.0	63.2	65.3	35.1	0.82

Mounted Ball Bearing Supports

Duty: Standard
Rolling Elements: Ball
Bearing Material: 52100 Chrome Steel or 400 Series Stainless Steel
Housing: Nolu®-Clean
Self-Alignment: ± 1°
Lock: Setscrew
Bearing Seal: Single Lip Contact
Back Seal: Spring Seal
End Cap: White Protective Cap
Temperature: 30° to 180°F (0° to 82°C)

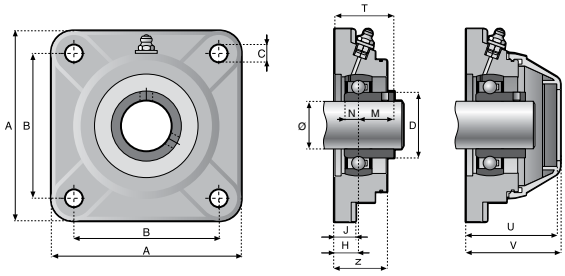

This UCFQ style mounted bearing uses external fitting caps.

UCFQ Series Four Bolt Flange - Nolu®-Clean - Setscrew Locking - External Fit Safety Cap

Bore Diameter		52100 Chrome Steel Bearing Insert		
		Optional Safety Cap	Sealed Closed Cap	Sealed Open Cap
inch	mm	Part Description	Part Description	Part Description
3/4	-	UCFQ204-12-NC	UCFQ204-12-NC-CEC	UCFQ204-12-NC-OEC
-	20	UCFQ204-20M-NC	UCFQ204-20M-NC-CEC	UCFQ204-20M-NC-OEC
1	-	UCFQ205-16-NC	UCFQ205-16-NC-CEC	UCFQ205-16-NC-OEC
-	25	UCFQ205-25M-NC	UCFQ205-25M-NC-CEC	UCFQ205-25M-NC-OEC
1 3/16	-	UCFQ206-19-NC	UCFQ206-19-NC-CEC	UCFQ206-19-NC-OEC
1 1/4R	-	UCFQ206-20-NC	UCFQ206-20-NC-CEC	UCFQ206-20-NC-OEC
-	30	UCFQ206-30M-NC	UCFQ206-30M-NC-CEC	UCFQ206-30M-NC-OEC
1 1/4	-	UCFQ207-20-NC	-	-
1 7/16	-	UCFQ207-23-NC	UCFQ207-23-NC-CEC	UCFQ207-23-NC-OEC
-	35	UCFQ207-35M-NC	UCFQ207-35M-NC-CEC	UCFQ207-35M-NC-OEC
1 1/2	-	UCFQ208-24-NC	UCFQ208-24-NC-CEC	UCFQ208-24-NC-OEC
-	40	UCFQ208-40M-NC	UCFQ208-40M-NC-CEC	UCFQ208-40M-NC-OEC

Bore Diameter		Dimensions inch / mm					
		A	B	C	D	H	J
inch	mm						
3/4	-	3 25/64	2 1/2	7/16	1 1/8	39/64	25/64
-	20	86.1	63.5	10.9	28.4	15.5	9.9
1	-	3 3/4	2 3/4	7/16	1 11/32	43/64	1/2
-	25	95.0	70.1	10.9	34.0	17.0	12.2
1 3/16	-	4 1/4	3 1/4	7/16	1 9/32	9/16	1/2
1 1/4R	-						
-	30	108.0	82.6	10.9	32.5	14.5	12.2
1 1/4	-	4 5/8	3 5/8	35/64	1 27/32	23/32	5/8
1 7/16	-						
-	35	118.1	91.9	14.0	46.7	18.0	15.7
1 1/2	-	1 3/16	4	35/64	2 1/16	23/32	5/8
-	40	132.1	101.6	14.0	52.6	18.0	15.7

UCFQ Series Four Bolt Flange - Nolu®-Clean - Setscrew Locking - External Fit Safety Cap

Bore Diameter		Stainless Steel Bearing Insert		
		Optional Safety Cap	Sealed Closed Cap	Sealed Open Cap
inch	mm	Part Description	Part Description	Part Description
3/4	-	UCFQ204-12-SS-NC	UCFQ204-12-SS-NC-CEC	UCFQ204-12-SS-NC-OEC
-	20	UCFQ204-20M-SS-NC	UCFQ204-20M-SS-NC-CEC	UCFQ204-20M-SS-NC-OEC
1	-	UCFQ205-16-SS-NC	UCFQ205-16-SS-NC-CEC	UCFQ205-16-SS-NC-OEC
-	25	UCFQ205-25M-SS-NC	UCFQ205-25M-SS-NC-CEC	UCFQ205-25M-SS-NC-OEC
1 3/16	-	UCFQ206-19-SS-NC	UCFQ206-19-SS-NC-CEC	UCFQ206-19-SS-NC-OEC
1 1/4R	-	UCFQ206-20-SS-NC	UCFQ206-20-SS-NC-CEC	UCFQ206-20-SS-NC-OEC
-	30	UCFQ206-30M-SS-NC	UCFQ206-30M-SS-NC-CEC	UCFQ206-30M-SS-NC-OEC
1 1/4	-	UCFQ207-20-SS-NC	-	-
1 7/16	-	UCFQ207-23-SS-NC	UCFQ207-23-SS-NC-CEC	UCFQ207-23-SS-NC-OEC
-	35	UCFQ207-35M-SS-NC	UCFQ207-35M-SS-NC-CEC	UCFQ207-35M-SS-NC-OEC
1 1/2	-	UCFQ208-24-SS-NC	UCFQ208-24-SS-NC-CEC	UCFQ208-24-SS-NC-OEC
-	40	UCFQ208-40M-SS-NC	UCFQ208-40M-SS-NC-CEC	UCFQ208-40M-SS-NC-OEC

Bore Diameter		Dimensions inch / mm									Weight (lbs/kgs)
inch	mm	M	M Stainless	N	N Stainless	T	T Stainless	U	V	Z	
3/4	-	23/32	23/32	9/32	19/64	1 21/64	1 21/64	1 7/8	1 61/64	1	0.51
-	20	18.3	18.3	7.11	7.6	33.8	33.8	47.5	49.5	25.9	0.23
1	-	49/64	25/32	19/64	19/64	1 7/16	1 7/16	2 1/16	2 1/8	1 9/64	0.75
-	25	19.6	19.8	7.6	7.6	36.6	36.8	52.3	54.1	29.0	0.34
1 3/16	-	7/8	7/8	5/16	11/32	1 7/16	1 29/64	2	2 1/16	1 9/64	1.10
1 1/4R	-										
-	30	22.1	22.1	7.9	8.9	36.6	36.8	50.8	52.6	29.0	0.50
1 1/4	-	1	1	3/8	3/8	1 23/32	1 23/32	2 1/2	2 19/32	1 19/64	1.43
1 7/16	-										
-	35	25.4	25.4	9.4	9.7	43.4	43.4	63.8	65.8	33.0	0.65
1 1/2	-	1 3/16	1 3/16	11/32	7/16	1 57/64	1 57/64	2 1/2	2 9/16	1 3/8	1.81
-	40	30.2	30.2	8.9	10.9	48.0	48.0	63.2	65.3	35.1	0.82

Duty: Standard
Rolling Elements: Ball
Bearing Material: 52100 Chrome Steel or 400 Series Stainless Steel
Housing: Black Polyamide
Self-Alignment: ± 1°
Lock: Setscrew
Bearing Seal: Single Lip Contact
Back Seal: Spring Seal
End Cap: Yellow Protective Cap
Temperature: 30° to 180°F (0° to 82°C)

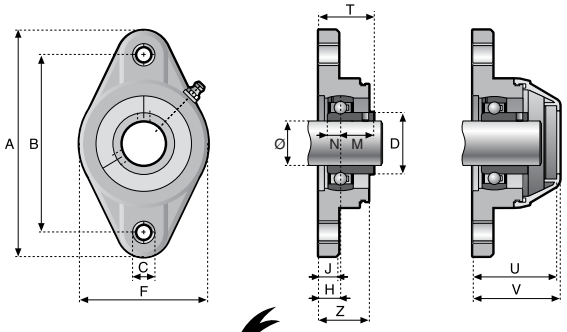

This UCFH style mounted bearing uses external fitting caps.

UCFH Series Two Bolt Flange - Polyamide - Setscrew Locking - External Fit Safety Cap

Bore Diameter		52100 Chrome Steel Bearing Insert		
		Optional Safety Cap	Sealed Closed Cap	Sealed Open Cap
inch	mm	Part Description	Part Description	Part Description
3/4	-	UCFH204-12	UCFH204-12-CEC	UCFH204-12-OEC
-	20	UCFH204-20M	UCFH204-20M-CEC	UCFH204-20M-OEC
1	-	UCFH205-16	UCFH205-16-CEC	UCFH205-16-OEC
-	25	UCFH205-25M	UCFH205-25M-CEC	UCFH205-25M-OEC
1 3/16	-	UCFH206-19	UCFH206-19-CEC	UCFH206-19-OEC
1 1/4R	-	UCFH206-20	UCFH206-20-CEC	UCFH206-20-OEC
-	30	UCFH206-30M	UCFH206-30M-CEC	UCFH206-30M-OEC
1 1/4	-	UCFH207-20	-	-
1 7/16	-	UCFH207-23	UCFH207-23-CEC	UCFH207-23-OEC
-	35	UCFH207-35M	UCFH207-35M-CEC	UCFH207-35M-OEC
1 1/2	-	UCFH208-24	UCFH208-24-CEC	UCFH208-24-OEC
-	40	UCFH208-40M	UCFH208-40M-CEC	UCFH208-40M-OEC

Bore Diameter		Dimensions inch / mm						
		A	B	C	D	F	H	J
inch	mm							
3/4	-	4 1/2	3 35/64	7/16	1 1/8	2 33/64	39/64	25/64
-	20	114.0	89.9	10.9	28.4	64.0	15.5	9.9
1	-	5 1/8	3 29/32	7/16	1 11/32	2 3/4	43/64	1/2
-	25	130.0	99.1	10.9	34.0	70.1	17.0	12.2
1 3/16	-	5 53/64	4 39/64	7/16	1 9/16	3 5/16	9/16	1/2
1 1/4R	-							
-	30	148.1	117.1	10.9	39.9	84.1	14.5	12.2
1 1/4	-	6 27/64	5 1/8	9/16	1 27/32	3 17/32	23/32	5/8
1 7/16	-							
-	35	163.1	130.0	14.0	46.7	89.9	18.0	15.7
1 1/2	-	6 7/8	5 21/32	9/16	2 1/16	3 15/16	23/32	5/8
-	40	175.0	144.0	14.0	52.6	100.1	18.0	15.7

UCFH Series Two Bolt Flange - Polyamide - Setscrew Locking - External Fit Safety Cap

Bore Diameter		Stainless Steel Bearing Insert		
		Optional Safety Cap	Sealed Closed Cap	Sealed Open Cap
inch	mm	Part Description	Part Description	Part Description
3/4	-	UCFH204-12-SS	UCFH204-12-SS-CEC	UCFH204-12-SS-OEC
-	20	UCFH204-20M-SS	UCFH204-20M-SS-CEC	UCFH204-20M-SS-OEC
1	-	UCFH205-16-SS	UCFH205-16-SS-CEC	UCFH205-16-SS-OEC
-	25	UCFH205-25M-SS	UCFH205-25M-SS-CEC	UCFH205-25M-SS-OEC
1 3/16	-	UCFH206-19-SS	UCFH206-19-SS-CEC	UCFH206-19-SS-OEC
1 1/4R	-	UCFH206-20-SS	UCFH206-20-SS-CEC	UCFH206-20-SS-OEC
-	30	UCFH206-30M-SS	UCFH206-30M-SS-CEC	UCFH206-30M-SS-OEC
1 1/4	-	UCFH207-20-SS	-	-
1 7/16	-	UCFH207-23-SS	UCFH207-23-SS-CEC	UCFH207-23-SS-OEC
-	35	UCFH207-35M-SS	UCFH207-35M-SS-CEC	UCFH207-35M-SS-OEC
1 1/2	-	UCFH208-24-SS	UCFH208-24-SS-CEC	UCFH208-24-SS-OEC
-	40	UCFH208-40M-SS	UCFH208-40M-SS-CEC	UCFH208-40M-SS-OEC

Bore Diameter		Dimensions inch / mm									Weight (lbs/kgs)
inch	mm	M	M Stainless	N	N Stainless	T	T Stainless	U	V	Z	
3/4	-	23/32	23/32	9/32	19/64	1 21/64	1 21/64	1 7/8	1 61/64	1	0.46
-	20	18.3	18.3	7.1	7.6	33.8	33.8	47.5	49.5	25.9	0.21
1	-	49/64	25/32	19/64	19/64	1 7/16	1 7/16	2 1/16	2 1/8	1 9/64	0.70
-	25	19.6	19.8	7.6	7.6	36.6	36.8	52.3	54.1	29.0	0.32
1 3/16	-	7/8	7/8	5/16	11/32	1 7/16	1 29/64	2	2 1/16	1 9/64	1.03
1 1/4R	-										
-	30	22.1	22.1	7.9	8.9	36.6	36.8	50.8	52.6	29.0	0.47
1 1/4	-	1	1	3/8	3/8	1 23/32	1 23/32	2 1/2	2 19/32	1 19/64	1.36
1 7/16	-										
-	35	25.4	25.4	9.4	9.7	43.4	43.4	63.8	65.8	33.0	0.62
1 1/2	-	1 3/16	1 3/16	11/32	7/16	1 57/64	1 57/64	2 1/2	2 9/16	1 3/8	1.81
-	40	30.2	30.2	8.9	10.9	48.0	48.0	63.2	65.3	35.1	0.82

Duty: Standard
Rolling Elements: Ball
Bearing Material: 52100 Chrome Steel or 400 Series Stainless Steel
Housing: Nolu®-Clean
Self-Alignment: ± 1°
Lock: Setscrew
Bearing Seal: Single Lip Contact
Back Seal: Spring Seal
End Cap: White Protective Cap
Temperature: 30° to 180°F (0° to 82°C)

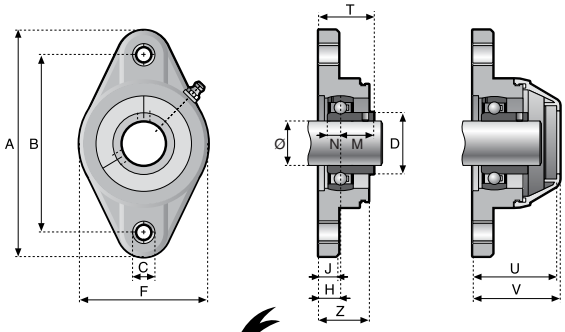

This UCFH style mounted bearing uses external fitting caps.

UCFH Series Two Bolt Flange - Nolu®-Clean - Setscrew Locking - External Fit Safety Cap

Bore Diameter		52100 Chrome Steel Bearing Insert		
		Optional Safety Cap	Sealed Closed Cap	Sealed Open Cap
inch	mm	Part Description	Part Description	Part Description
3/4	-	UCFH204-12-NC	UCFH204-12-NC-CEC	UCFH204-12-NC-OEC
-	20	UCFH204-20M-NC	UCFH204-20M-NC-CEC	UCFH204-20M-NC-OEC
1	-	UCFH205-16-NC	UCFH205-16-NC-CEC	UCFH205-16-NC-OEC
-	25	UCFH205-25M-NC	UCFH205-25M-NC-CEC	UCFH205-25M-NC-OEC
1 3/16	-	UCFH206-19-NC	UCFH206-19-NC-CEC	UCFH206-19-NC-OEC
1 1/4R	-	UCFH206-20-NC	UCFH206-20-NC-CEC	UCFH206-20-NC-OEC
-	30	UCFH206-30M-NC	UCFH206-30M-NC-CEC	UCFH206-30M-NC-OEC
1 1/4	-	UCFH207-20-NC	-	-
1 7/16	-	UCFH207-23-NC	UCFH207-23-NC-CEC	UCFH207-23-NC-OEC
-	35	UCFH207-35M-NC	UCFH207-35M-NC-CEC	UCFH207-35M-NC-OEC
1 1/2	-	UCFH208-24-NC	UCFH208-24-NC-CEC	UCFH208-24-NC-OEC
-	40	UCFH208-40M-NC	UCFH208-40M-NC-CEC	UCFH208-40M-NC-OEC

Bore Diameter		Dimensions inch / mm						
		A	B	C	D	F	H	J
inch	mm							
3/4	-	4 1/2	3 35/64	7/16	1 1/8	2 33/64	39/64	25/64
-	20	114.0	89.9	10.9	28.4	64.0	15.5	9.9
1	-	5 1/8	3 29/32	7/16	1 11/32	2 3/4	43/64	1/2
-	25	130.0	99.1	10.9	34.0	70.1	17.0	12.2
1 3/16	-	5 53/64	4 39/64	7/16	1 9/16	3 5/16	9/16	1/2
1 1/4R	-							
-	30	148.1	117.1	10.9	39.9	84.1	14.5	12.2
1 1/4	-	6 27/64	5 1/8	9/16	1 27/32	3 17/32	23/32	5/8
1 7/16	-							
-	35	163.1	130.0	14.0	46.7	89.9	18.0	15.7
1 1/2	-	6 7/8	5 21/32	9/16	2 1/16	3 15/16	23/32	5/8
-	40	175.0	144.0	14.0	52.6	100.1	18.0	15.7

UCFH Series Two Bolt Flange - Nolu®-Clean - Setscrew Locking - External Fit Safety Cap

Bore Diameter		Stainless Steel Bearing Insert		
		Optional Safety Cap	Sealed Closed Cap	Sealed Open Cap
inch	mm	Part Description	Part Description	Part Description
3/4	-	UCFH204-12-SS-NC	UCFH204-12-SS-NC-CEC	UCFH204-12-SS-NC-OEC
-	20	UCFH204-20M-SS-NC	UCFH204-20M-SS-NC-CEC	UCFH204-20M-SS-NC-OEC
1	-	UCFH205-16-SS-NC	UCFH205-16-SS-NC-CEC	UCFH205-16-SS-NC-OEC
-	25	UCFH205-25M-SS-NC	UCFH205-25M-SS-NC-CEC	UCFH205-25M-SS-NC-OEC
1 3/16	-	UCFH206-19-SS-NC	UCFH206-19-SS-NC-CEC	UCFH206-19-SS-NC-OEC
1 1/4R	-	UCFH206-20-SS-NC	UCFH206-20-SS-NC-CEC	UCFH206-20-SS-NC-OEC
-	30	UCFH206-30M-SS-NC	UCFH206-30M-SS-NC-CEC	UCFH206-30M-SS-NC-OEC
1 1/4	-	UCFH207-20-SS-NC	-	-
1 7/16	-	UCFH207-23-SS-NC	UCFH207-23-SS-NC-CEC	UCFH207-23-SS-NC-OEC
-	35	UCFH207-35M-SS-NC	UCFH207-35M-SS-NC-CEC	UCFH207-35M-SS-NC-OEC
1 1/2	-	UCFH208-24-SS-NC	UCFH208-24-SS-NC-CEC	UCFH208-24-SS-NC-OEC
-	40	UCFH208-40M-SS-NC	UCFH208-40M-SS-NC-CEC	UCFH208-40M-SS-NC-OEC

Bore Diameter		Dimensions inch / mm									Weight (lbs/kgs)
		M	M	N	N	T	T	U	V	Z	
inch	mm		Stainless		Stainless		Stainless				
3/4	-	23/32	23/32	9/32	19/64	1 21/64	1 21/64	1 7/8	1 61/64	1	0.46
-	20	18.3	18.3	7.1	7.6	33.8	33.8	47.5	49.5	25.9	0.21
1	-	49/64	25/32	19/64	19/64	1 7/16	1 7/16	2 1/16	2 1/8	1 9/64	0.70
-	25	19.6	19.8	7.6	7.6	36.6	36.8	52.3	54.1	29.0	0.32
1 3/16	-	7/8	7/8	5/16	11/32	1 7/16	1 29/64	2	2 1/16	1 9/64	1.03
1 1/4R	-										
-	30	22.1	22.1	7.9	8.9	36.6	36.8	50.8	52.6	29.0	0.47
1 1/4	-	1	1	3/8	3/8	1 23/32	1 23/32	2 1/2	2 19/32	1 19/64	1.36
1 7/16	-										
-	35	25.4	25.4	9.4	9.7	43.4	43.4	63.8	65.8	33.0	0.62
1 1/2	-	1 3/16	1 3/16	11/32	7/16	1 57/64	1 57/64	2 1/2	2 9/16	1 3/8	1.81
-	40	30.2	30.2	8.9	10.9	48.0	48.0	63.2	65.3	35.1	0.82

Duty: Standard
Rolling Elements: Ball
Bearing Material: 52100 Chrome Steel or 400 Series Stainless Steel
Housing: Black Polyamide
Self-Alignment: ± 1°
Lock: Setscrew
Bearing Seal: Single Lip Contact
Back Seal: Spring Seal
End Cap: Yellow Protective Cap
Temperature: 30° to 180°F (0° to 82°C)

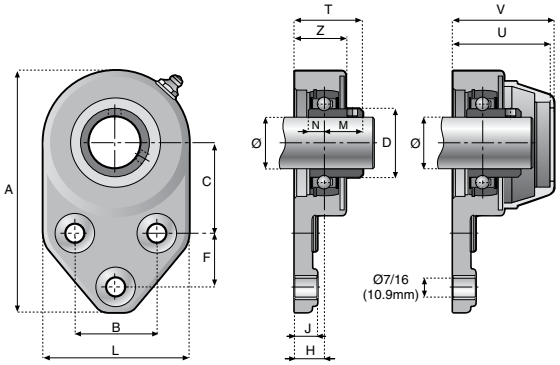

UCFB Series Flange Bracket - Polyamide - Setscrew Locking - Internal Fit Safety Cap

Bore Diameter		52100 Chrome Steel Bearing Insert		
		Optional Safety Cap	Sealed Closed Cap	Sealed Open Cap
inch	mm	Part Description	Part Description	Part Description
3/4	-	UCFBZ204-12	UCFBZ204-12-CEC	UCFBZ204-12-OEC
-	20	UCFBZ204-20M	UCFBZ204-20M-CEC	UCFBZ204-20M-OEC
1	-	UCFB205-16	UCFB205-16-CEC	UCFB205-25M-OEC
-	25	UCFB205-25M	UCFB205-25M-CEC	UCFB205-16-OEC
1 3/16	-	UCFB206-19	UCFB206-19CEC	UCFB206-19-OEC
1 1/4R	-	UCFB206-20	UCFB206-20-CEC	UCFB206-20-OEC
-	30	UCFB206-30M	UCFB206-30M-CEC	UCFB206-30M-OEC

Bore Diameter		Dimensions inch / mm						
inch	mm	A	B	C	D	F	H	J
3/4	-	4 59/64	1 5/8	1 13/16	1 1/8	1 1/8	11/16	1/2
-	20	125.0	41.4	46.0	28.4	28.7	17.0	12.4
1	-	4 59/64	1 5/8	1 13/16	1 11/32	1 1/8	5/8	1/2
-	25	125.0	41.4	46.0	34.0	28.7	16.0	12.4
1 3/16	-	5 17/32	1 7/8	2 1/16	1 11/32	1 1/4	11/16	1/2
1 1/4R	-							
-	30	140.5	47.5	52.3	34.0	31.8	17.0	12.4

UCFB Series Flange Bracket - Polyamide - Setscrew Locking - Internal Fit Safety Cap

Bore Diameter		Stainless Steel Bearing Insert		
		Optional Safety Cap	Sealed Closed Cap	Sealed Open Cap
inch	mm	Part Description	Part Description	Part Description
3/4	-	UCFBZ204-12-SS	UCFBZ204-12-SS-CEC	UCFBZ204-12-SS-OEC
-	20	UCFBZ204-20M-SS	UCFBZ204-20M-SS-CEC	UCFBZ204-20M-SS-OEC
1	-	UCFB205-16-SS	UCFB205-16-SS-CEC	UCFB205-16-SS-OEC
-	25	UCFB205-25M-SS	UCFB205-25M-SS-CEC	UCFB205-25M-SS-OEC
1 3/16	-	UCFB206-19-SS	UCFB206-19-SS-CEC	UCFB206-19-SS-OEC
1 1/4R	-	UCFB206-20-SS	UCFB206-20-SS-CEC	UCFB206-20-SS-OEC
-	30	UCFB206-30M-SS	UCFB206-30M-SS-CEC	UCFB206-30M-SS-OEC

Bore Diameter		Dimensions inch / mm										Weight (lbs/kgs)
		L	M	M	N	N	T	T	U	V	Z	
inch	mm			Stainless		Stainless		Stainless				
3/4	-	2 23/32	23/32	23/32	9/32	19/64	1 25/64	1 25/64	1 61/64	2 1/64	1 5/64	0.87
-	20	69.1	18.3	18.3	7.1	7.6	35.3	35.3	49.5	51.3	27.4	0.35
1	-	2 23/32	49/64	25/32	19/64	19/64	1 13/32	1 13/32	2 1/16	2 9/64	1 5/64	1.09
-	25	69.1	19.6	19.8	7.6	7.6	35.6	35.8	52.6	54.6	27.4	0.45
1 3/16	-	3 5/16	7/8	7/8	5/16	11/32	1 17/32	1 17/32	2 7/32	2 19/64	1 5/32	1.18
1 1/4R	-											
-	30	84.1	22.1	22.1	7.9	8.9	39.1	39.1	56.4	58.4	29.5	0.50

Duty: Standard
Rolling Elements: Ball
Bearing Material: 52100 Chrome Steel or 400 Series Stainless Steel
Housing: Nolu®-Clean
Self-Alignment: ± 1°
Lock: Setscrew
Bearing Seal: Single Lip Contact
Back Seal: Spring Seal
End Cap: White Protective Cap
Temperature: 30° to 180°F (0° to 82°C)

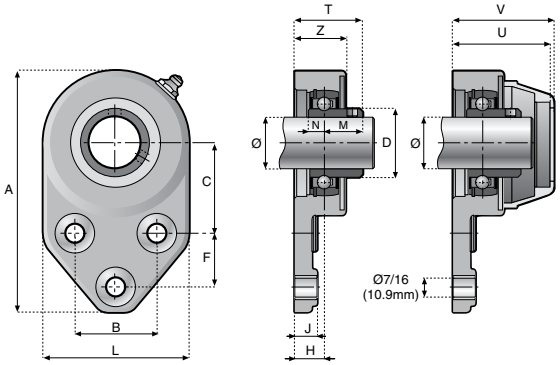

UCFB Series Flange Bracket - Nolu®-Clean - Setscrew Locking - Internal Fit Safety Cap

Bore Diameter		52100 Chrome Steel Bearing Insert		
		Optional Safety Cap	Sealed Closed Cap	Sealed Open Cap
inch	mm	Part Description	Part Description	Part Description
3/4	-	UCFBZ204-12-NC	UCFBZ204-12-NC-CEC	UCFBZ204-12-NC-OEC
-	20	UCFBZ204-20M-NC	UCFBZ204-20M-NC-CEC	UCFBZ204-20M-NC-OEC
1	-	UCFB205-16-NC	UCFB205-16-NC-CEC	UCFB205-25M-NC-OEC
-	25	UCFB205-25M-NC	UCFB205-25M-NC-CEC	UCFB205-16-NC-OEC
1 3/16	-	UCFB206-19-NC	UCFB206-19-NC-CEC	UCFB206-19-NC-OEC
1 1/4R	-	UCFB206-20-NC	UCFB206-20-NC-CEC	UCFB206-20-NC-OEC
-	30	UCFB206-30M-NC	UCFB206-30M-NC-CEC	UCFB206-30M-NC-OEC

Bore Diameter		Dimensions inch / mm						
inch	mm	A	B	C	D	F	H	J
3/4	-	4 59/64	1 5/8	1 13/16	1 1/8	1 1/8	11/16	1/2
-	20	125.0	41.4	46.0	28.4	28.7	17.0	12.4
1	-	4 59/64	1 5/8	1 13/16	1 11/32	1 1/8	5/8	1/2
-	25	125.0	41.4	46.0	34.0	28.7	16.0	12.4
1 3/16	-	5 17/32	1 7/8	2 1/16	1 11/32	1 1/4	11/16	1/2
1 1/4R	-							
-	30	140.5	47.5	52.3	34.0	31.8	17.0	12.4

UCFB Series Flange Bracket - Nolu®-Clean - Setscrew Locking - Internal Fit Safety Cap

Bore Diameter		Stainless Steel Bearing Insert		
		Optional Safety Cap	Sealed Closed Cap	Sealed Open Cap
inch	mm	Part Description	Part Description	Part Description
3/4	-	UCFBZ204-12-SS-NC	UCFBZ204-12-SS-NC-CEC	UCFBZ204-12-SS-NC-OEC
-	20	UCFBZ204-20M-SS-NC	UCFBZ204-20M-SS-NC-CEC	UCFBZ204-20M-SS-NC-OEC
1	-	UCFB205-16-SS-NC	UCFB205-16-SS-NC-CEC	UCFB205-16-SS-NC-OEC
-	25	UCFB205-25M-SS-NC	UCFB205-25M-SS-NC-CEC	UCFB205-25M-SS-NC-OEC
1 3/16	-	UCFB206-19-SS-NC	UCFB206-19-SS-NC-CEC	UCFB206-19-SS-NC-OEC
1 1/4R	-	UCFB206-20-SS-NC	UCFB206-20-SS-NC-CEC	UCFB206-20-SS-NC-OEC
-	30	UCFB206-30M-SS-NC	UCFB206-30M-SS-NC-CEC	UCFB206-30M-SS-NC-OEC

Bore Diameter		Dimensions inch / mm										Weight (lbs/kgs)
		L	M	M	N	N	T	T	U	V	Z	
inch	mm			Stainless		Stainless		Stainless				
3/4	-	2 23/32	23/32	23/32	9/32	19/64	1 25/64	1 25/64	1 61/64	2 1/64	1 5/64	0.87
-	20	69.1	18.3	18.3	7.1	7.6	35.3	35.3	49.5	51.3	27.4	0.35
1	-	2 23/32	49/64	25/32	19/64	19/64	1 13/32	1 13/32	2 1/16	2 9/64	1 5/64	1.09
-	25	69.1	19.6	19.8	7.6	7.6	35.6	35.8	52.6	54.6	27.4	0.45
1 3/16	-	3 5/16	7/8	7/8	5/16	11/32	1 17/32	1 17/32	2 7/32	2 19/64	1 5/32	1.18
1 1/4R	-											
-	30	84.1	22.1	22.1	7.9	8.9	39.1	39.1	56.4	58.4	29.5	0.50

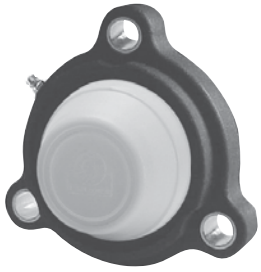

Duty: Standard
Rolling Elements: Ball
Bearing Material: 52100 Chrome Steel or 400 Series Stainless Steel
Housing: Black Polyamide
Self-Alignment: ± 1°
Lock: Setscrew
Bearing Seal: Single Lip Contact
Back Seal: Spring Seal
End Cap: Yellow Protective Cap
Temperature: 30° to 180°F (0° to 82°C)

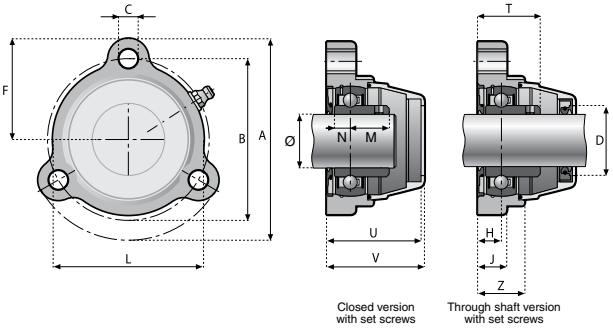

UCFG Series Flange Bracket - Polyamide - Setscrew Locking - Internal Fit Safety Cap

Bore Diameter		52100 Chrome Steel Bearing Insert		
		Optional Safety Cap	Sealed Closed Cap	Sealed Open Cap
inch	mm	Part Description	Part Description	Part Description
1	-	UCFG205-16	UCFG205-16-CEC	UCFG205-16-OEC
-	25	UCFG205-25M	UCFG205-25M-CEC	UCFG205-25M-OEC
1 3/16	-	UCFG206-19	UCFG206-19-CEC	UCFG206-19-OEC
1 1/4R	-	UCFG206-20	UCFG206-20-CEC	UCFG206-20-OEC
-	30	UCFG206-30M	UCFG206-30M-CEC	UCFG206-30M-OEC

Bore Diameter		Dimensions inch / mm						
		A	B	C	D	F	H	J
inch	mm							
1	-	3 3/4	3	21/64	11/32	1 7/8	17/32	41/64
-	25	95.5	76.2	8.4	34.0	47.5	13.5	16.5
1 3/16	-	4 7/16	3 37/64	7/16	1 9/16	2 7/32	17/32	41/64
1 1/4R	-							
-	30	113.0	90.9	10.9	39.9	56.4	13.5	16.5

UCFG Series Flange Bracket - Polyamide - Setscrew Locking - Internal Fit Safety Cap

Bore Diameter		Stainless Steel Bearing Insert		
		Optional Safety Cap	Sealed Closed Cap	Sealed Open Cap
inch	mm	Part Description	Part Description	Part Description
1	-	UCFG205-16-SS	UCFG205-16-SS-CEC	UCFG205-16-SS-OEC
-	25	UCFG205-25M-SS	UCFG205-25M-SS-CEC	UCFG205-25M-SS-OEC
1 3/16	-	UCFG206-19-SS	UCFG206-19-SS-CEC	UCFG206-19-SS-OEC
1 1/4R	-	UCFG206-20-SS	UCFG206-20-SS-CEC	UCFG206-20-SS-OEC
-	30	UCFG206-30M-SS	UCFG206-30M-SS-CEC	UCFG206-30M-SS-OEC

Bore Diameter		Dimensions inch / mm										Weight (lbs/kgs)
		L	M	M Stainless	N	N Stainless	T	T Stainless	U	V	Z	
inch	mm											
1	-	2 25/32	49/64	25/32	19/64	19/64	1 19/64	1 5/16	1 57/64	1 31/32	63/64	0.66
-	25	70.9	19.6	19.8	7.6	7.6	33.0	33.3	48.0	50.0	24.9	0.25
1 3/16	-	3 5/16	7/8	7/8	5/16	11/32	1 13/32	1 13/32	2 1/8	2 3/16	1 1/16	0.77
1 1/4R	-											
-	30	84.1	22.1	22.1	7.9	8.9	35.6	35.8	53.8	55.9	26.9	0.30

Mounted Ball Bearing Supports

Duty: Standard
Rolling Elements: Ball
Bearing Material: 52100 Chrome Steel or 400 Series Stainless Steel
Housing: Black Polyamide
Self-Alignment: ± 1°
Lock: Setscrew
Bearing Seal: Single Lip Contact
Back Seal: Spring Seal
End Cap: Yellow Protective Cap
Temperature: 30° to 180°F (0° to 82°C)

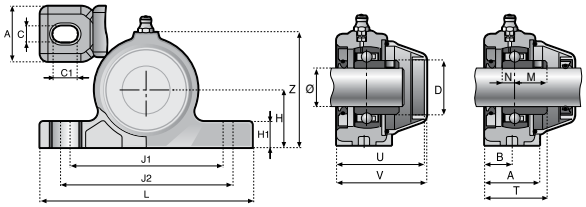

UCP Series Two Bolt Pillow Block - Polyamide - Setscrew Locking - Internal Fit Safety Cap

Bore Diameter		52100 Chrome Steel Bearing Insert		
		Optional Safety Cap	Sealed Closed Cap	Sealed Open Cap
inch	mm	Part Description	Part Description	Part Description
3/4	-	UCP204-12	UCP204-12-CEC	UCP204-12-OEC
-	20	UCP204-20M	UCP204-20M-CEC	UCP204-20M-OEC
1	-	UCP205-16	UCP205-16-CEC	UCP205-16-OEC
-	25	UCP205-25M	UCP205-25M-CEC	UCP205-25M-OEC
1 3/16	-	UCP206-19	UCP206-19-CEC	UCP206-19-OEC
1 1/4R	-	UCP206-20	UCP206-20-CEC	UCP206-20-OEC
-	30	UCP206-30M	UCP206-30M-CEC	UCP206-30M-OEC
1 1/4	-	UCP207-20	-	-
1 7/16	-	UCP207-23	UCP207-23-CEC	UCP207-23-OEC
-	35	UCP207-35M	UCP207-35M-CEC	UCP207-35M-OEC
1 1/2	-	UCP208-24	UCP208-24-CEC	UCP208-24-OEC
-	40	UCP208-40M	UCP208-40M-CEC	UCP208-40M-OEC

Bore Diameter		Dimensions inch / mm								
		A	B	C	C1	D	H	H1	J1	J2
inch	mm									
3/4	-	1 7/32	23/32	7/16	43/64	1 1/8	1 5/16	5/8	3 37/64	4 1/6
-	20	31.0	18.0	10.9	17.0	28.4	33.3	16.0	90.9	103.12
1	-	1 3/8	25/32	7/16	43/64	1 11/32	1 7/16	5/8	3 13/16	4 9/32
-	25	35.1	20.1	10.9	17.0	34.0	36.6	16.0	97.0	109.0
1 3/16	-	1 39/64	15/16	1/2	7/8	1 9/16	1 11/16	27/32	4 3/8	5 5/64
1 1/4R	-									
-	30	40.9	23.9	13.0	22.1	39.9	42.9	21.6	111.0	129.0
1 1/4	-	1 49/64	1	1/2	7/8	1 27/32	1 7/8	27/32	4 39/64	5 5/16
1 7/16	-									
-	35	45.0	25.4	13.0	22.1	46.7	47.5	21.6	117.1	134.9
1 1/2	-	1 57/64	51/64	1/2	7/8	2 1/16	1 15/16	27/32	5 5/64	5 25/32
-	40	48.0	20.1	13.0	22.1	52.6	49.3	21.6	129.0	147.1

UCP Series Two Bolt Pillow Block - Polyamide - Setscrew Locking - Internal Fit Safety Cap

Bore Diameter		Stainless Steel Bearing Insert		
		Optional Safety Cap	Sealed Closed Cap	Sealed Open Cap
inch	mm	Part Description	Part Description	Part Description
3/4	-	UCP204-12-SS	UCP204-12-SS-CEC	UCP204-12-SS-OEC
-	20	UCP204-20M-SS	UCP204-20M-SS-CEC	UCP204-20M-SS-OEC
1	-	UCP205-16-SS	UCP205-16-SS-CEC	UCP205-16-SS-OEC
-	25	UCP205-25M-SS	UCP205-25M-SS-CEC	UCP205-25M-SS-OEC
1 3/16	-	UCP206-19-SS	UCP206-19-SS-CEC	UCP206-19-SS-OEC
1 1/4R	-	UCP206-20-SS	UCP206-20-SS-CEC	UCP206-20-SS-OEC
-	30	UCP206-30M-SS	UCP206-30M-SS-CEC	UCP206-30M-SS-OEC
1 1/4	-	UCP207-20-SS	-	-
1 7/16	-	UCP207-23-SS	UCP207-23-SS-CEC	UCP207-23-SS-OEC
-	35	UCP207-35M-SS	UCP207-35M-SS-CEC	UCP207-35M-SS-OEC
1 1/2	-	UCP208-24-SS	UCP208-24-SS-CEC	UCP208-24-SS-OEC
-	40	UCP208-40M-SS	UCP208-40M-SS-CEC	UCP208-40M-SS-OEC

Bore Diameter		Dimensions inch / mm										Weight (lbs/kgs)
		L	M	M	N	N	T	T	U	V	Z	
inch	mm			Stainless		Stainless		Stainless				
3/4	-	5	23/32	23/32	9/32	19/64	1 7/16	1 7/16	2	2 1/16	2 41/64	0.68
-	20	127.0	18.3	18.3	7.1	7.6	36.3	36.3	50.5	52.6	67.1	0.30
1	-	5 5/16	49/64	25/32	19/64	19/64	1 9/16	1 9/16	2 11/64	2 1/4	2 27/32	0.86
-	25	134.9	19.6	19.8	7.6	7.6	39.6	39.9	55.1	56.9	72.4	0.37
1 3/16	-	6 9/64	7/8	7/8	5/16	11/32	1 13/16	1 13/16	2 9/16	2 41/64	3 7/16	1.15
1 1/4R	-											
-	30	156.0	22.1	22.1	7.9	8.9	46.0	46.2	65.0	67.1	87.1	0.50
1 1/4	-	6 15/32	1	1	3/8	3/8	2	2	2 41/64	2 23/32	3 3/4	1.59
1 7/16	-											
-	35	164.1	25.4	25.4	9.4	9.7	51.1	50.8	67.1	69.1	95.0	0.70
1 1/2	-	7 3/64	1 1/4	1 3/16	11/32	7/16	2 3/64	1 31/32	2 15/32	2 9/16	3 15/16	1.92
-	40	179.1	32.0	30.2	8.9	10.9	52.1	50.0	63.0	65.0	100.1	0.85

Mounted Ball Bearing Supports

Duty: Standard
Rolling Elements: Ball
Bearing Material: 52100 Chrome Steel or 400 Series Stainless Steel
Housing: Nolu®-Clean
Self-Alignment: ± 1°
Lock: Setscrew
Bearing Seal: Single Lip Contact
Back Seal: Spring Seal
End Cap: White Protective Cap
Temperature: 30° to 180°F (0° to 82°C)

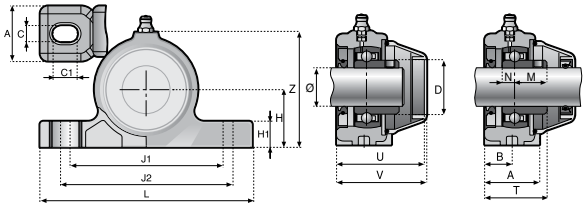

UCP Series Two Bolt Pillow Block - Nolu®-Clean - Setscrew Locking - Internal Fit Safety Cap

Bore Diameter		52100 Chrome Steel Bearing Insert		
		Optional Safety Cap	Sealed Closed Cap	Sealed Open Cap
inch	mm	Part Description	Part Description	Part Description
3/4	-	UCP204-12-NC	UCP204-12-NC-CEC	UCP204-12-NC-OEC
-	20	UCP204-20M-NC	UCP204-20M-NC-CEC	UCP204-20M-NC-OEC
1	-	UCP205-16-NC	UCP205-16-NC-CEC	UCP205-16-NC-OEC
-	25	UCP205-25M-NC	UCP205-25M-NC-CEC	UCP205-25M-NC-OEC
1 3/16	-	UCP206-19-NC	UCP206-19-NC-CEC	UCP206-19-NC-OEC
1 1/4R	-	UCP206-20-NC	UCP206-20-NC-CEC	UCP206-20-NC-OEC
-	30	UCP206-30M-NC	UCP206-30M-NC-CEC	UCP206-30M-NC-OEC
1 1/4	-	UCP207-20-NC	-	-
1 7/16	-	UCP207-23-NC	UCP207-23-NC-CEC	UCP207-23-NC-OEC
-	35	UCP207-35M-NC	UCP207-35M-NC-CEC	UCP207-35M-NC-OEC
1 1/2	-	UCP208-24-NC	UCP208-24-NC-CEC	UCP208-24-NC-OEC
-	40	UCP208-40M-NC	UCP208-40M-NC-CEC	UCP208-40M-NC-OEC

Bore Diameter		Dimensions inch / mm								
inch	mm	A	B	C	C1	D	H	H1	J1	J2
3/4	-	1 7/32	23/32	7/16	43/64	1 1/8	1 5/16	5/8	3 37/64	4 1/6
-	20	31.0	18.0	10.9	17.0	28.4	33.3	16.0	90.9	103.12
1	-	1 3/8	25/32	7/16	43/64	1 11/32	1 7/16	5/8	3 13/16	4 9/32
-	25	35.1	20.1	10.9	17.0	34.0	36.6	16.0	97.0	109.0
1 3/16	-	1 39/64	15/16	1/2	7/8	1 9/16	1 11/16	27/32	4 3/8	5 5/64
1 1/4R	-									
-	30	40.9	23.9	13.0	22.1	39.9	42.9	21.6	111.0	129.0
1 1/4	-	1 49/64	1	1/2	7/8	1 27/32	1 7/8	27/32	4 39/64	5 5/16
1 7/16	-									
-	35	45.0	25.4	13.0	22.1	46.7	47.5	21.6	117.1	134.9
1 1/2	-	1 57/64	51/64	1/2	7/8	2 1/16	1 15/16	27/32	5 5/64	5 25/32
-	40	48.0	20.1	13.0	22.1	52.6	49.3	21.6	129.0	147.1

UCP Series Two Bolt Pillow Block - Nolu®-Clean - Setscrew Locking - Internal Fit Safety Cap

Bore Diameter		Stainless Steel Bearing Insert		
		Optional Safety Cap	Sealed Closed Cap	Sealed Open Cap
inch	mm	Part Description	Part Description	Part Description
3/4	-	UCP204-12-SS-NC	UCP204-12-SS-NC-CEC	UCP204-12-SS-NC-OEC
-	20	UCP204-20M-SS-NC	UCP204-20M-SS-NC-CEC	UCP204-20M-SS-NC-OEC
1	-	UCP205-16-SS-NC	UCP205-16-SS-NC-CEC	UCP205-16-SS-NC-OEC
-	25	UCP205-25M-SS-NC	UCP205-25M-SS-NC-CEC	UCP205-25M-SS-NC-OEC
1 3/16	-	UCP206-19-SS-NC	UCP206-19-SS-NC-CEC	UCP206-19-SS-NC-OEC
1 1/4R	-	UCP206-20-SS-NC	UCP206-20-SS-NC-CEC	UCP206-20-SS-NC-OEC
-	30	UCP206-30M-SS-NC	UCP206-30M-SS-NC-CEC	UCP206-30M-SS-NC-OEC
1 1/4	-	UCP207-20-SS-NC	-	-
1 7/16	-	UCP207-23-SS-NC	UCP207-23-SS-NC-CEC	UCP207-23-SS-NC-OEC
-	35	UCP207-35M-SS-NC	UCP207-35M-SS-NC-CEC	UCP207-35M-SS-NC-OEC
1 1/2	-	UCP208-24-SS-NC	UCP208-24-SS-NC-CEC	UCP208-24-SS-NC-OEC
-	40	UCP208-40M-SS-NC	UCP208-40M-SS-NC-CEC	UCP208-40M-SS-NC-OEC

Bore Diameter		Dimensions inch / mm										Weight (lbs/kgs)
		L	M	M	N	N	T	T	U	V	Z	
inch	mm			Stainless		Stainless		Stainless				
3/4	-	5	23/32	23/32	9/32	19/64	1 7/16	1 7/16	2	2 1/16	2 41/64	0.68
-	20	127.0	18.3	18.3	7.1	7.6	36.3	36.3	50.5	52.6	67.1	0.30
1	-	5 5/16	49/64	25/32	19/64	19/64	1 9/16	1 9/16	2 11/64	2 1/4	2 27/32	0.86
-	25	134.9	19.6	19.8	7.6	7.6	39.6	39.9	55.1	56.9	72.4	0.37
1 3/16	-	6 9/64	7/8	7/8	5/16	11/32	1 13/16	1 13/16	2 9/16	2 41/64	3 7/16	1.15
1 1/4R	-											
-	30	156.0	22.1	22.1	7.9	8.9	46.0	46.2	65.0	67.1	87.1	0.50
1 1/4	-	6 15/32	1	1	3/8	3/8	2	2	2 41/64	2 23/32	3 3/4	1.59
1 7/16	-											
-	35	164.1	25.4	25.4	9.4	9.7	51.1	50.8	67.1	69.1	95.0	0.70
1 1/2	-	7 3/64	1 1/4	1 3/16	11/32	7/16	2 3/64	1 31/32	2 15/32	2 9/16	3 15/16	1.92
-	40	179.1	32.0	30.2	8.9	10.9	52.1	50.0	63.0	65.0	100.1	0.85

Mounted Ball Bearing Supports

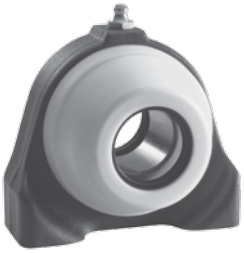

Duty: Standard
Rolling Elements: Ball
Bearing Material: 52100 Chrome Steel or 400 Series Stainless Steel
Housing: Black Polyamide
Self-Alignment: ± 1°
Lock: Setscrew
Bearing Seal: Single Lip Contact
Back Seal: Spring Seal
End Cap: Yellow Protective Cap
Temperature: 30° to 180°F (0° to 82°C)

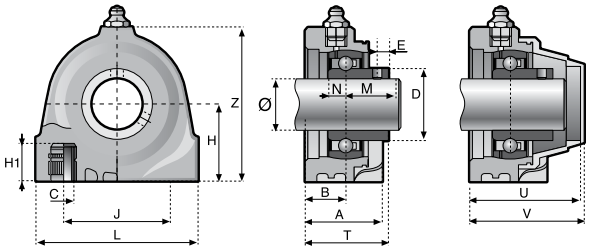

This UCPA style mounted bearing uses external fitting caps.

UCPA Series Tapped Base Pillow Block - Polyamide - Setscrew Locking - External Fit Safety Cap

Bore Diameter		52100 Chrome Steel Bearing Insert		
		Optional Safety Cap	Sealed Closed Cap	Sealed Open Cap
inch	mm	Part Description	Part Description	Part Description
3/4	-	UCPA204-12	UCPA204-12-CEC	UCPA204-12-OEC
-	20	UCPA204-20M	UCPA204-20M-CEC	UCPA204-20M-OEC
1	-	UCPA205-16	UCPA205-16-CEC	UCPA205-16-OEC
-	25	UCPA205-25M	UCPA205-25M-CEC	UCPA205-25M-OEC
1 3/16	-	UCPA206-19	UCPA206-19-CEC	UCPA206-19-OEC
1 1/4R	-	UCPA206-20	UCPA206-20-CEC	UCPA206-20-OEC
-	30	UCPA206-30M	UCPA206-30M-CEC	UCPA206-30M-OEC

Bore Diameter		Dimensions inch / mm							
inch	mm	A	B	C	D	E	H	H1	J
3/4	-	1 1/4	11/16	3/8	1 1/8	7/32	1 5/16	5/8	2
-	20	32.0	17.5	3/8	28.4	5.3	33.3	16.0	50.8
1	-	1 27/64	49/64	3/8	1 11/32	7/32	1 7/16	5/8	2
-	25	36.1	19.6	3/8	34.0	5.3	36.6	16.0	50.8
1 3/16	-	1 9/16	25/32	7/16	1 9/16	15/64	1 11/16	15/16	3
1 1/4R	-								
-	30	39.9	20.1	7/16	39.9	5.8	42.9	23.9	76.2

UCPA Series Tapped Base Pillow Block - Polyamide - Setscrew Locking - External Fit Safety Cap

Bore Diameter		Stainless Steel Bearing Insert		
		Optional Safety Cap	Sealed Closed Cap	Sealed Open Cap
inch	mm	Part Description	Part Description	Part Description
3/4	-	UCPA204-12-SS	UCPA204-12-SS-CEC	UCPA204-12-SS-OEC
-	20	UCPA204-20M-SS	UCPA204-20M-SS-CEC	UCPA204-20M-SS-OEC
1	-	UCPA205-16-SS	UCPA205-16-SS-CEC	UCPA205-16-SS-OEC
-	25	UCPA205-25M-SS	UCPA205-25M-SS-CEC	UCPA205-25M-SS-OEC
1 3/16	-	UCPA206-19-SS	UCPA206-19-SS-CEC	UCPA206-19-SS-OEC
1 1/4R	-	UCPA206-20-SS	UCPA206-20-SS-CEC	UCPA206-20-SS-OEC
-	30	UCPA206-30M-SS	UCPA206-30M-SS-CEC	UCPA206-30M-SS-OEC

Bore Diameter		Dimensions inch / mm										Weight (lbs/kgs)
		L	M	M	N	N	T	T	U	V	Z	
inch	mm			Stainless		Stainless		Stainless				
3/4	-	2 3/4	23/32	23/32	9/32	19/64	1 13/32	1 13/32	1 15/16	2	2 9/16	0.79
-	20	70.1	18.3	18.3	7.1	7.6	35.8	35.8	49.0	51.1	65.0	0.36
1	-	2 61/64	49/64	25/32	19/64	19/64	1 17/32	1 35/64	2 1/8	2 3/16	2 53/64	0.90
-	25	74.9	19.6	19.8	7.6	7.6	39.1	39.4	54.1	55.9	71.9	0.41
1 3/16	-	3 55/64	7/8	7/8	5/16	11/32	1 41/64	1 21/32	2 5/16	2 13/32	3 11/32	1.23
1 1/4R	-											
-	30	98.0	22.1	22.1	7.9	8.9	41.9	42.2	58.9	61.0	85.1	0.56

Duty: Standard
Rolling Elements: Ball
Bearing Material: 52100 Chrome Steel or 400 Series Stainless Steel
Housing: Nolu®-Clean
Self-Alignment: ± 1°
Lock: Setscrew
Bearing Seal: Single Lip Contact
Back Seal: Spring Seal
End Cap: White Protective Cap
Temperature: 30° to 180°F (0° to 82°C)

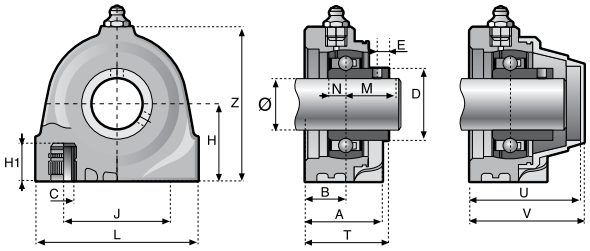

This UCPA style mounted bearing uses external fitting caps.

UCPA Series Tapped Base Pillow Block - Nolu®-Clean - Setscrew Locking - External Fit Safety Cap

Bore Diameter		52100 Chrome Steel Bearing Insert		
		Optional Safety Cap	Sealed Closed Cap	Sealed Open Cap
inch	mm	Part Description	Part Description	Part Description
3/4	-	UCPA204-12-NC	UCPA204-12-NC-CEC	UCPA204-12-NC-OEC
-	20	UCPA204-20M-NC	UCPA204-20M-NC-CEC	UCPA204-20M-NC-OEC
1	-	UCPA205-16-NC	UCPA205-16-NC-CEC	UCPA205-16-NC-OEC
-	25	UCPA205-25M-NC	UCPA205-25M-NC-CEC	UCPA205-25M-NC-OEC
1 3/16	-	UCPA206-19-NC	UCPA206-19-NC-CEC	UCPA206-19-NC-OEC
1 1/4R	-	UCPA206-20-NC	UCPA206-20-NC-CEC	UCPA206-20-NC-OEC
-	30	UCPA206-30M-NC	UCPA206-30M-NC-CEC	UCPA206-30M-NC-OEC

Bore Diameter		Dimensions inch / mm							
inch	mm	A	B	C	D	E	H	H1	J
3/4	-	1 1/4	11/16	3/8	1 1/8	7/32	1 5/16	5/8	2
-	20	32.0	17.5	3/8	28.4	5.3	33.3	16.0	50.8
1	-	1 27/64	49/64	3/8	1 11/32	7/32	1 7/16	5/8	2
-	25	36.1	19.6	3/8	34.0	5.3	36.6	16.0	50.8
1 3/16	-	1 9/16	25/32	7/16	1 9/16	15/64	1 11/16	15/16	3
1 1/4R	-								
-	30	39.9	20.1	7/16	39.9	5.8	42.9	23.9	76.2

UCPA Series Tapped Base Pillow Block - Nolu®-Clean - Setscrew Locking - External Fit Safety Cap

Bore Diameter		Stainless Steel Bearing Insert		
		Optional Safety Cap	Sealed Closed Cap	Sealed Open Cap
inch	mm	Part Description	Part Description	Part Description
3/4	-	UCPA204-12-SS-NC	UCPA204-12-SS-NC-CEC	UCPA204-12-SS-NC-OEC
-	20	UCPA204-20M-SS-NC	UCPA204-20M-SS-NC-CEC	UCPA204-20M-SS-NC-OEC
1	-	UCPA205-16-SS-NC	UCPA205-16-SS-NC-CEC	UCPA205-16-SS-NC-OEC
-	25	UCPA205-25M-SS-NC	UCPA205-25M-SS-NC-CEC	UCPA205-25M-SS-NC-OEC
1 3/16	-	UCPA206-19-SS-NC	UCPA206-19-SS-NC-CEC	UCPA206-19-SS-NC-OEC
1 1/4R	-	UCPA206-20-SS-NC	UCPA206-20-SS-NC-CEC	UCPA206-20-SS-NC-OEC
-	30	UCPA206-30M-SS-NC	UCPA206-30M-SS-NC-CEC	UCPA206-30M-SS-NC-OEC

Bore Diameter		Dimensions inch / mm										Weight (lbs/kgs)
		L	M	M	N	N	T	T	U	V	Z	
inch	mm			Stainless		Stainless		Stainless				
3/4	-	2 3/4	23/32	23/32	9/32	19/64	1 13/32	1 13/32	1 15/16	2	2 9/16	0.79
-	20	70.1	18.3	18.3	7.1	7.6	35.8	35.8	49.0	51.1	65.0	0.36
1	-	2 61/64	49/64	25/32	19/64	19/64	1 17/32	1 35/64	2 1/8	2 3/16	2 53/64	0.90
-	25	74.9	19.6	19.8	7.6	7.6	39.1	39.4	54.1	55.9	71.9	0.41
1 3/16	-	3 55/64	7/8	7/8	5/16	11/32	1 41/64	1 21/32	2 5/16	2 13/32	3 11/32	1.23
1 1/4R	-											
-	30	98.0	22.1	22.1	7.9	8.9	41.9	42.2	58.9	61.0	85.1	0.56

Mounted Ball Bearing Supports

Duty: Standard
Rolling Elements: Ball
Bearing Material: 52100 Chrome Steel or 400 Series Stainless Steel
Housing: Black Polyamide
Self-Alignment: ± 1°
Lock: Setscrew
Bearing Seal: Single Lip Contact
Back Seal: Spring Seal
End Cap: Yellow Protective Cap
Temperature: 30° to 180°F (0° to 82°C)

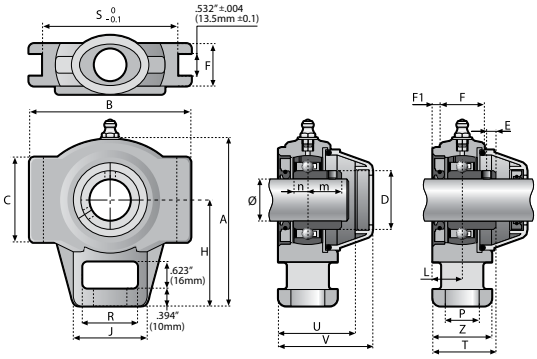

UCT Series Tapped Base Pillow Block - Polyamide - Setscrew Locking - Internal Fit Safety Cap

Bore Diameter		52100 Chrome Steel Bearing Insert		
		Optional Safety Cap	Sealed Closed Cap	Sealed Open Cap
inch	mm	Part Description	Part Description	Part Description
3/4	-	UCTZ204-12	UCTZ204-12-CEC	UCTZ204-12-OEC
-	20	UCTZ204-20M	UCTZ204-20M-CEC	UCTZ204-20M-OEC
1	-	UCT205-16	UCT205-16-CEC	UCT205-16-OEC
-	25	UCT205-25M	UCT205-25M-CEC	UCT205-25M-OEC
1 3/16	-	UCT206-19	UCT206-19-CEC	UCT206-19-OEC
1 1/4R	-	UCT206-20	UCT206-20-CEC	UCT206-20-OEC
1 7/16	-	UCTX207-23	UCTX207-23-CEC	UCTX207-23-OEC
-	30	UCT206-30M	UCT206-30M-CEC	UCT206-30M-OEC
-	35	UCTX207-35M	UCTX207-35M-CEC	UCTX207-35M-OEC

Bore Diameter		Dimensions inch / mm								
inch	mm	A	B	C	D	E	F	F1	G	H
3/4	-	3 27/32	3 5/8	1 31/32	1 11/32	7/32	63/64	11/64	1/4	2 7/16
1	-									
-	20	97.5	92.0	50.0	34.0	5.5	25.0	4.5	M6 x .75	62.0
-	25									
1 3/16	-									
1 1/4R	-	4 15/32	4 3/32	2 1/4	1 57/64	1/4	1 7/64	11/54	1/4	2 27/32
1 7/16	-									
-	30	118.0	104.0	57.0	48.0	6.5	28.00	4.5	M6 x .75	72.0
-	35									

UCT Series Tapped Base Pillow Block - Polyamide - Setscrew Locking - Internal Fit Safety Cap

Bore Diameter		Stainless Steel Bearing Insert		
		Optional Safety Cap	Sealed Closed Cap	Sealed Open Cap
inch	mm	Part Description	Part Description	Part Description
3/4	-	UCTZ204-12-SS	UCTZ204-12-SS-CEC	UCTZ204-12-SS-OEC
-	20	UCTZ204-20M-SS	UCTZ204-20M-SS-CEC	UCTZ204-20M-SS-OEC
1	-	UCT205-16-SS	UCT205-16-SS-CEC	UCT205-16-SS-OEC
-	25	UCT205-25M-SS	UCT205-25M-SS-CEC	UCT205-25M-SS-OEC
1 3/16	-	UCT206-19-SS	UCT206-19-SS-CEC	UCT206-19-SS-OEC
1 1/4R	-	UCT206-20-SS	UCT206-20-SS-CEC	UCT206-20-SS-OEC
1 7/16	-	UCTX207-23-SS	UCTX207-23-SS-CEC	UCTX207-23-SS-OEC
-	30	UCT206-30M-SS	UCT206-30M-SS-CEC	UCT206-30M-SS-OEC
-	35	UCTX207-35M-SS	UCTX207-35M-SS-CEC	UCTX207-35M-SS-OEC

Bore Diameter		Dimensions inch / mm											Weight (lbs/kgs)
inch	mm	L	P Dia.	R	S	J	Z	T	m	n	U	V	
3/4	-	21/32	3/4	1 1/4	3	1 3/4	1 11/32	1 13/32	45/64	9/32	1 3/4	2 9/64	0.66
1	-							1 7/16	49/64	19/64			0.77
-	20	17.00	19.0	32.0	76.0	45.0	34.0	35.7	18.0	7.0	44.5	54.5	0.30
-	25							36.5	19.5	7.5			0.35
1 3/16	-	47/64	55/64	1 15/32	3 1/2	2 13/64	1 15/32	1 39/64	7/8	23/64	2 1/32	2 27/64	0.99
1 1/4R	-							1 39/64	7/8	23/64			0.99
1 7/16	-	18.5	22.0	37.0	89.0	56.0	37.0	1 47/64	1	3/8	51.5	61.5	1.21
-	30							40.5	22.0	8.0			0.45
-	35							42.0	23.5	8.5			0.55

Duty: Standard
Rolling Elements: Ball
Bearing Material: 52100 Chrome Steel
Lock: Setscrew
Bearing Seal: Single Lip Contact
Temperature: 30° to 180°F (0° to 82°C)

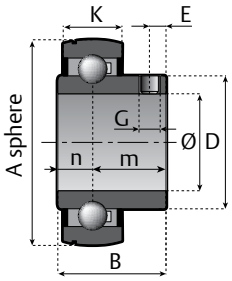

UC Chrome Steel - Setscrew Locking Insert Bearing

Shaft Diameter		Part Description	Dimensions in. / mm								Bearing Load Rating		Unit Wt. lb./kg.
			A	B	K	D	E	G	m	n	Dynamic Load	Static Load	
inch	mm										lb / N	lb / N	
3/4	-	UC204-12	1.850	31/32	18/32	1 5/32	6/32	1/4" - 28	23/32	9/32	2214	1479	.40
-	20	UC204	47	25	14	29	5	M6 x 1	18	7	9850	6580	.18
1	-	UC205-16	2.047	1 2/32	19/32	1 11/32	7/32	1/4" - 28	25/32	9/32	2428	1754	.49
-	25	UC205	52	27	15	34	5.5	M6 x 1	19.5	7.5	10800	7800	.22
1 3/16	-	UC206-19	2.441	1 3/16	20/32	1 19/32	15/64	1/4" - 28	7/8	5/16	3372	2540	.88
1 1/4	-	UC206-20											
-	30	UC206	62	30	16	40.3	6	M6 x 1	22	8	15000	11300	.40
1 1/4	-	UC207-20	2.835	1 1/4	21/32	1 7/8	1/4	5/16" - 24	15/16	11/32	4429	3440	.99
1 7/16	-	UC207-23											
-	35	UC207	72	32	17	48	6.5	M8 x 1	23.5	8.5	19700	15300	.45
1 1/2	-	UC208-24	3.150	1 11/32	23/32	2 3/32	9/32	5/16" - 24	31/32	11/32	5036	40241	1.37
-	40	UC208	80	34	18	53	7	M8 x 1	25	9	22400	179000	.62

Duty: Standard
Rolling Elements: Ball
Bearing Material: 400 Series Stainless Steel
Lock: Setscrew
Bearing Seal: Single Lip Contact
Temperature: 30° to 180°F (0° to 82°C)

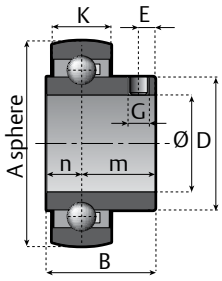

UCSS Stainless Steel - Setscrew Locking Insert Bearing

Shaft Diameter		Part Description	Dimensions in. / mm								Bearing Load Rating		Unit Wt. lb./kg.
			A	B	K	D	E	G	m	n	Dynamic Load	Static Load	
inch	mm										lb / N	lb / N	
3/4	-	UCSS204-12	1.850	31/32	18/32	1 5/32	6/32	1/4" - 28	3/4	9/32	1641	1102	.40
-	20	UCSS204	47	25	14	29	5	M6 x .75	18.7	7	7300	4900	.18
1	-	UCSS205-16	2.047	1 2/32	19/32	1 11/32	7/32	1/4" - 28	25/32	9/32	1821	1304	.49
-	25	UCSS205	52	27	15	34	5.5	M6 x .75	19.5	7.5	8100	5800	.22
1 3/16	-	UCSS206-19	2.441	1 3/16	20/32	1 19/32	15/64	1/4" - 28	7/8	5/16	2529	1888	.88
1 1/4	-	UCSS206-20											
-	30	UCSS206	62	30	16	40.3	6	M6 x .75	22	8	11250	8400	.40
1 1/4	-	UCSS207-20	2.835	1 1/4	21/32	1 7/8	1/4	5/16" - 24	15/16	11/32	3305	2563	.99
1 7/16	-	UCSS207-23											
-	35	UCSS207	72	32	17	48	6.5	M8 x 1	23.5	8.5	14700	11400	.45
1 1/2	-	UCSS208-24	3.150	1 11/32	23/32	2 3/32	9/32	5/16" - 24	31/32	11/32	3777	3012	1.37
-	40	UCSS208	80	34	18	53	7	M8 x 1	25	9	16800	13400	.62

Other Products

12, 15, 16 and 17MM bore sizes

CS & CL Series Stainless Steel Covered Polyamide Flanges

Polyamide UCHA Hanger Bearings

300 Series Stainless Steel Housing and 400 Series Stainless Insert Bearings

Non-Standard Housing Configurations and Customer Specials

Engineering Section Table of Contents

Installation Instructions 38

Lubrication 40

End Cap Table 41

Part ID Cross Reference 42

Mounted Bearing Supports Notes and Installation Instructions

WARNING

- Read and follow all instructions carefully.
- Disconnect and lock-out power before installation and maintenance. Working on or near energized equipment can result in severe injury or death.
- Do not operate equipment without guards in place. Exposed equipment can result in severe injury or death.

CAUTION

- Periodic inspections should be performed. Failure to perform proper maintenance can result in premature product failure and personal injury.

Notes:

1. Additional bearing installation, relubrication and maintenance instructions can be found on our website: www.systemplastsmartguide.com.

2. The bearing is pre-lubricated with an H1 grade, synthetic base oil, complex calcium sulfonate soap thickener NLGI 2 grease. Re-greasing is not required during installation. When re-greasing, we recommend regreasing with a compatible grease. When feasible the bearing should be rotated while re-greasing for a better distribution of the grease.

3. Bearing assemblies are supplied with a lubrication fitting installed in the housing and may contain a plug supplied loose in the bag or box. If you want to make the bearing assembly non-regreasable, remove the lubrication fitting and install the plug. In general, re-greasing will help promote operating bearing life.

Installation Steps:

Step 1: Inspect Shaft and Bore

Shaft should be within tolerance range shown in Table 1, clean and free of nicks and burrs. Mount bearing on unused section of shafting or repair/replace shafting as required. Inspect both the shaft and bearing bore for debris or contaminants. Wipe clean as necessary.

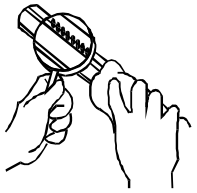

Table 1

Shaft Diameter	Shaft Tolerance
1/2” to 1 1/2”	Nominal to -.0005”
12mm to 40mm	Nominal to -.013mm

Step 2: Check Support Surfaces

Make sure the base of the housing and the support surfaces are clean and free from burrs. If the housing elevation is adjusted with shims these must cover the entire contact area between the housing and the support surface.

Step 3: Install Unit

To aid installation, keep weight off bearing during mounting. Slide unit onto shaft by pushing on the inner ring. If it is difficult to mount bearing on shaft, use a piece of emery cloth to reduce high spots on shaft.

Step 4: Fasten Unit in Place

Install housing mounting bolts and check bearing alignment. Align the bearing units as closely as possible. Tighten mounting bolts to recommended fastener torques. Check the shaft for freedom of rotation by rotating shaft with hand in both directions.

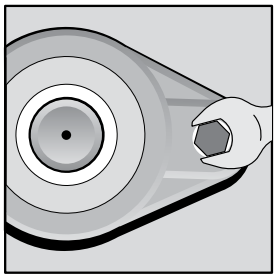

Mounted Bearing Supports Notes and Installation Instructions Cont.

Step 5: Tighten Locking Mechanism

a. Setscrew (Grub screw) Locking Inserts

Setscrews (Grub screws) in multiple bearing applications should be aligned as shown.
Tighten bearing units to the shaft as follows:

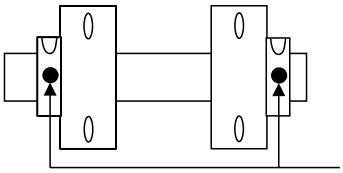

i. Torque first setscrew (grub screw) “A” to one half the recommended torque in table 2 or 3.

ii. Torque the second setscrew (grub screw) “B” to the full recommended torque in table 2 or 3. Go back to “A” and tighten to full recommended torque.

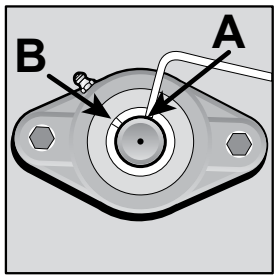

Table 2 / AISI 52100 Chrome Steel Setscrew (Grub Screw) Locking

Bore Diameter	Setscrew (Grub Screw)	Recommended Torque	
mm	mm	Nm	in-lbs
12, 15, 16, 17	M5x0.8	3.4	30
20, 25, 30	M6x1	5.6	50
35, 40	M8x1	11.3	100
inch	inch	Nm	in-lbs
3/4, 1, 1 3/16, 1 1/4R, 1 1/4	1/4”-28	5.6	50
1 7/16, 1 1/2	5/16”-24	11.3	100

Table 3 / 400 Series Stainless Setscrew (Grub Screw) Locking

Bore Diameter	Setscrew (Grub Screw)	Recommended Torque	
mm	mm	Nm	in-lbs
20, 25, 30	M6x0.75	5.6	50
35, 40	M8x1	11.3	100
inch	inch	Nm	in-lbs
3/4, 1, 1 3/16, 1 1/4R	1/4”-28	5.6	50
1 1/4, 1 7/16, 1 1/2	5/16”-24	11.3	100

b. Eccentric Locking Inserts

i. Place collar on inner race and rotate by hand in direction of shaft rotation until eccentrics are engaged.

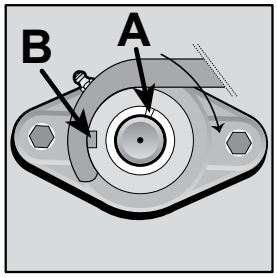

ii. Use Spanner Wrench (as shown) or insert drift pin into the hole in the collar O.D. “B” and lock in direction of shaft rotation with the aid of small hammer.

iii. Torque single setscrew (grub screw) “A” to recommended torque in Table 4.

iv. Check shaft again for freedom of rotation and then tighten the second bearing unit in the same fashion. When all bearings are tightened, perform a final check of the shaft for freedom of rotation.

Table 4 / AISI 52100 Chrome Steel Eccentric Locking

Bore Diameter	Setscrew (Grub Screw)	Recommended Torque	
mm	mm	Nm	in-lbs
12, 15, 16, 17, 20, 25	M6x1	5.6	50
30, 35, 40	M8x1	11.3	100
inch	inch	Nm	in-lbs
3/4, 1	1/4”-28	5.6	50
1 3/16, 1 1/4, 1 7/16, 1 1/2	5/16”-24	11.3	100

Lubrication:

All System Plast Mounted Ball Bearing Supports are delivered with a high quality food grade grease with an EP additive. The bearing is ready for use with no initial lubrication required. The grease consists of a calcium sulfonate complex thickener, mineral oil, and NLGI grade 2 consistency.

Compatibility of grease is critical; therefore consult with Application Engineering and your grease supplier to insure greases are compatible. For best performance it is recommended to relubricate with calcium sulfonate complex thickened grease with a comparable NLGI consistency and base oil properties. Relubricatable System Plast mounted bearings are supplied with grease fittings or zerks for ease of lubrication with hand or automatic grease guns. Always wipe the fitting and grease nozzle clean.

CAUTION: If possible, it is recommended to lubricate the bearing while rotating, until grease purge is seen from the seals. If this is not an option due to safety reasons, follow the alternate lubrication procedure below.

Alternate Lubrication Procedure:

Stop rotating equipment. Add one half of the recommended amount shown in Table 1. Start the bearing and run for a few minutes. Stop the bearing and add the second half of the recommended amount. A temperature rise after lubrication, sometimes 30°F (17°C), is normal. Bearing should operate at temperatures less than 180°F (82°C) and should not exceed 200°F (93°C) for intermittent operation. For lubrication guidelines, see Tables 1 and 2.

Note: Grease charges in Table 1 are based on the use of calcium sulfonate complex thickened grease with a NLGI grade 2 consistency.

Note: Table 2 is a general recommendation. Experience and testing may be required for specific applications.

Speed Limits:

Note: The Maximum Operational Speeds listed in Table 3 are for standard setscrew (grub screw) lock System Plast bearings.

Table 1

Grease Charge for Relubrication		
Series	Grease Charge	
	Ounces	Grams
204	.06	1.6
205	.07	1.9
206	.10	2.7
207	.14	3.9
208	.18	5.2

Table 2

Relubrication Recommendations			
Environment	Temperature (°F)	Speed (% Catalog Max)	Frequency
Dirty	-20 to 250	0 - 100%	Daily to 1 Week
Clean	-20 to 125	0 - 25%	4 to 10 Months
		26 - 50%	1 to 4 Months
		51 - 75%	1 Week to 1 Month
		76 - 100%	Daily to 1 Week
	125 to 175	0 - 25%	2 to 6 Weeks
		26 - 50%	1 Week to 1 Month
		51 - 75%	Daily to 1 Week
		76 - 100%	
	175 to 250	0 - 100%	Daily to 1 Week

Table 3

Maximum Operating Speed	
Series	Speed RPM
204	4200
205	3500
206	2900
207	2600
208	2200

End Caps for Black Polyamide Housings

Closed End Cap

Closed Cap Includes:
- Yellow Polypropylene Cap
- Heavy Duty NBR O-Ring

Open End Cap

Open Cap Includes:
- Yellow Polypropylene Cap
- Heavy Duty NBR O-Ring
- Spring Seal

Housing Type	Series	Bore Size Inch	Bore Size MM	Closed Cap	Open Cap	Fit
UCFH / UCFQ	204-12	3/4		50104 Closed Cap	70068 Open Cap	External
	204-20M		20		50068 Open Cap	
	205-16	1		50108 Closed Cap	70069 Open Cap	
	205-25M		25		50069 Open Cap	
	206-19	1 3/16		50100 Closed Cap	70052 Open Cap	
	206-20	1 1/4R			70052A Open Cap	
	206-30M		30		50052 Open Cap	
	207-20	1 1/4		50103 Closed Cap	70060A Open Cap	
	207-23	1 7/16			70060 Open Cap	
	207-35M		35		50060 Open Cap	
	208-40	1 1/2		50101 Closed Cap	70055 Open Cap	
	208-40M		40		50055 Open Cap	
UCFB	204-12	3/4		50109 Closed Cap	70081 Open Cap	Internal
	204-20M		20		50081 Open Cap	
	205-16	1		50106 Closed Cap	70073 Open Cap	
	205-25M		25		50073 Open Cap	
	206-19	1 3/16		50107 Closed Cap	70074 Open Cap	
	206-20	1 1/4R			70074A Open Cap	
	206-30M		30		50074 Open Cap	
UCFG	205-16	1		50106 Closed Cap	70073 Open Cap	Internal
	205-25M		25		50073 Open Cap	
	206-19	1 3/16		50112 Closed Cap	70087 Open Cap	
	206-20	1 1/4R			70087A Open Cap	
	206-30M		30		50087 Open Cap	
UCP	204-12	3/4		50109 Closed Cap	70081 Open Cap	Internal
	204-20M		20		50081 Open Cap	
	205-16	1		50106 Closed Cap	70073 Open Cap	
	205-25M		25		50073 Open Cap	
	206-19	1 3/16		50107 Closed Cap	70074 Open Cap	
	206-20	1 1/4R			70074A Open Cap	
	206-30M		30		50074 Open Cap	
	207-20	1 1/4		50107 Closed Cap	70075 Open Cap	
	207-23	1 7/16			70075A Open Cap	
	207-35M		35		50075 Open Cap	
	208-24	1 1/2		50110 Closed Cap	70082 Open Cap	
	208-40M		40		50082 Open Cap	
UCPA	204-12	3/4		50105 Closed Cap	70062 Open Cap	External
	204-20M		20		50062 Open Cap	
	205-16	1		50104 Closed Cap	70061 Open Cap	
	205-25M		25		50061 Open Cap	
	206-19	1 3/16		50102 Closed Cap	70058 Open Cap	
	206-20	1 1/4R			70058A Open Cap	
	206-30M		30		50058 Open Cap	
UCT	204-12	3/4		50106 Closed Cap	70072 Open Cap	Internal
	204-20M		20		50072 Open Cap	
	205-16	1			70073 Open Cap	
	205-25M		25		50073 Open Cap	
	206-19	1 3/16		50107 Closed Cap	70074 Open Cap	
	206-20	1 1/4R			70074A Open Cap	
	206-30M		30		50074 Open Cap	
	207-23	1 7/16			70075 Open Cap	
	207-35M		35		50075 Open Cap	

End Caps for White Nolu®-Clean Housings

Closed End Cap

Closed Cap Includes:
- White Polypropylene Cap
- Heavy Duty NBR O-Ring

Open End Cap

Open Cap Includes:
- White Polypropylene Cap
- Heavy Duty NBR O-Ring
- Spring Seal

Housing Type	Series	Bore Size Inch	Bore Size MM	Closed Cap	Open Cap	Fit
UCFH / UCFQ	204-12	3/4		50104CG Closed Cap	70068CG Open Cap	External
	204-20M		20		50068CG Open Cap	
	205-16	1		50108CG Closed Cap	70069CG Open Cap	
	205-25M		25		50069CG Open Cap	
	206-19	1 3/16		50100CG Closed Cap	70052CG Open Cap	
	206-20	1 1/4R			70052ACG Open Cap	
	206-30M		30		50052CG Open Cap	
	207-20	1 1/4		50103CG Closed Cap	70060ACG Open Cap	
	207-23	1 7/16			70060CG Open Cap	
	207-35M		35		50060CG Open Cap	
	208-40	1 1/2		50101CG Closed Cap	70055CG Open Cap	
	208-40M		40		50055CG Open Cap	
UCFB	204-12	3/4		50109CG Closed Cap	70081CG Open Cap	Internal
	204-20M		20		50081CG Open Cap	
	205-16	1		50106CG Closed Cap	70073CG Open Cap	
	205-25M		25		50073CG Open Cap	
	206-19	1 3/16		50107CG Closed Cap	70074CG Open Cap	
	206-20	1 1/4R			70074ACG Open Cap	
	206-30M		30		50074CG Open Cap	
UCP	204-12	3/4		50109CG Closed Cap	70081CG Open Cap	Internal
	204-20M		20		50081CG Open Cap	
	205-16	1		50106CG Closed Cap	70073CG Open Cap	
	205-25M		25		50073CG Open Cap	
	206-19	1 3/16		50107CG Closed Cap	70074CG Open Cap	
	206-20	1 1/4R			70074ACG Open Cap	
	206-30M		30		50074CG Open Cap	
	207-20	1 1/4		50107CG Closed Cap	70075CG Open Cap	
	207-23	1 7/16			70075ACG Open Cap	
	207-35M		35		50075CG Open Cap	
	208-24	1 1/2		50110CG Closed Cap	70082CG Open Cap	
	208-40M		40		50082CG Open Cap	
UCPA	204-12	3/4		50105CG Closed Cap	70062CG Open Cap	External
	204-20M		20		50062CG Open Cap	
	205-16	1		50104CG Closed Cap	70061CG Open Cap	
	205-25M		25		50061CG Open Cap	
	206-19	1 3/16		50102CG Closed Cap	70058CG Open Cap	
	206-20	1 1/4R			70058ACG Open Cap	
	206-30M		30		50058CG Open Cap	

Part ID and Part Description Cross Reference

Part ID	Part Description	Page
50204CG/SS-EC	UCFQ204-20M-SS-NC	13
50204CG-EC	UCFQ204-20M-NC	12
50204CGR/SS-EC	UCFQ204-20M-SS-NC-CEC	13
50204CGR-EC	UCFQ204-20M-NC-CEC	12
50204V/SS-EC	UCFQ204-20M-SS	11
50204V-EC	UCFQ204-20M	10
50204VR/SS-EC	UCFQ204-20M-SS-CEC	11
50204VR-EC	UCFQ204-20M-CEC	10
50205CG/SS-EC	UCFQ205-25M-SS-NC	13
50205CG-EC	UCFQ205-25M-NC	12
50205CGR/SS-EC	UCFQ205-25M-SS-NC-CEC	13
50205CGR-EC	UCFQ205-25M-NC-CEC	12
50205V/SS-EC	UCFQ205-25M-SS	11
50205V-EC	UCFQ205-25M	10
50205VR/SS-EC	UCFQ205-25M-SS-CEC	11
50205VR-EC	UCFQ205-25M-CEC	10
50206CG/SS-EC	UCFQ206-30M-SS-NC	13
50206CG-EC	UCFQ206-30M-NC	12
50206CGR/SS-EC	UCFQ206-30M-SS-NC-CEC	13
50206CGR-EC	UCFQ206-30M-NC-CEC	12
50206V/SS-EC	UCFQ206-30M-SS	11
50206V-EC	UCFQ206-30M	10
50206VR/SS-EC	UCFQ206-30M-SS-CEC	11
50206VR-EC	UCFQ206-30M-CEC	10
50207CG/SS-EC	UCFQ207-35M-SS-NC	13
50207CG-EC	UCFQ207-35M-NC	12
50207CGR/SS-EC	UCFQ207-35M-SS-NC-CEC	13
50207CGR-EC	UCFQ207-35M-NC-CEC	12
50207V/SS-EC	UCFQ207-35M-SS	11
50207V-EC	UCFQ207-35M	10
50207VR/SS-EC	UCFQ207-35M-SS-CEC	11
50207VR-EC	UCFQ207-35M-CEC	10
50208CG/SS-EC	UCFQ208-40M-SS-NC	13
50208CG-EC	UCFQ208-40M-NC	12
50208CGR/SS-EC	UCFQ208-40M-SS-NC-CEC	13
50208CGR-EC	UCFQ208-40M-NC-CEC	12
50208V/SS-EC	UCFQ208-40M-SS	11
50208V-EC	UCFQ208-40M	10
50208VR/SS-EC	UCFQ208-40M-SS-CEC	11
50208VR-EC	UCFQ208-40M-CEC	10
52205CGF	UCFB205-25M-NC	20
52205CGF/SS	UCFB205-25M-SS-NC	21
52205CGFA	UCFBZ204-20M-NC	20
52205CGFA/SS	UCFBZ204-20M-SS-NC	21
52205CGFR	UCFB205-25M-NC-CEC	20
52205CGFR/SS	UCFB205-25M-SS-NC-CEC	21
52205CGFRA	UCFBZ204-20M-NC-CEC	20
52205CGFRA/SS	UCFBZ204-20M-SS-NC-CEC	21
52205F	UCFB205-25M	18
52205F/SS	UCFB205-25M-SS	19
52205FA	UCFBZ204-20M	18
52205FA/SS	UCFBZ204-20M-SS	19
52205FR	UCFB205-25M-CEC	18
52205FR/SS	UCFB205-25M-SS-CEC	19
52205FRA	UCFBZ204-20M-CEC	18
52205FRA/SS	UCFBZ204-20M-SS-CEC	19
52205G	UCFG205-25M	22
52205G/SS	UCFG205-25M-SS	23
52205GR	UCFG205-25M-CEC	22
52205GR/SS	UCFG205-25M-SS-CEC	23
52206CGF	UCFB206-30M-NC	20
52206CGF/SS	UCFB206-30M-SS-NC	21
52206CGFR	UCFB206-30M-NC-CEC	20
52206CGFR/SS	UCFB206-30M-SS-NC-CEC	21

Part ID	Part Description	Page
52206F	UCFB206-30M	18
52206F/SS	UCFB206-30M-SS	19
52206FR	UCFB206-30M-CEC	18
52206FR/SS	UCFB206-30M-SS-CEC	19
52206G/SS	UCFG206-30M-SS	23
52206GR	UCFG206-30M-CEC	22
52206GR/SS	UCFG206-30M-SS-CEC	23
53204	UCP204-20M	24
53204/SS	UCP204-20M-SS	25
53204A	UCPA204-20M	28
53204A/SS	UCPA204-20M-SS	29
53204AR	UCPA204-20M-CEC	28
53204AR/SS	UCPA204-20M-SS-CEC	29
53204CG	UCP204-20M-NC	26
53204CG/SS	UCP204-20M-SS-NC	27
53204CGA	UCPA204-20M-NC	30
53204CGA/SS	UCPA204-20M-SS-NC	31
53204CGAR	UCPA204-20M-NC-CEC	30
53204CGAR/SS	UCPA204-20M-SS-NC-CEC	31
53204CGR	UCP204-20M-NC-CEC	26
53204CGR/SS	UCP204-20M-SS-NC-CEC	27
53204R	UCP204-20M-CEC	24
53204R/SS	UCP204-20M-SS-CEC	25
53205	UCP205-25M	24
53205/SS	UCP205-25M-SS	25
53205A	UCPA205-25M	28
53205A/SS	UCPA205-25M-SS	29
53205AR	UCPA205-25M-CEC	28
53205AR/SS	UCPA205-25M-SS-CEC	29
53205CG	UCP205-25M-NC	26
53205CG/SS	UCP205-25M-SS-NC	27
53205CGA	UCPA205-25M-NC	30
53205CGA/SS	UCPA205-25M-SS-NC	31
53205CGAR	UCPA205-25M-NC-CEC	30
53205CGAR/SS	UCPA205-25M-SS-NC-CEC	31
53205CGR	UCP205-25M-NC-CEC	26
53205CGR/SS	UCP205-25M-SS-NC-CEC	27
53205R	UCP205-25M-CEC	24
53205R/SS	UCP205-25M-SS-CEC	25
53206	UCP206-30M	24
53206/SS	UCP206-30M-SS	25
53206A	UCPA206-30M	28
53206A/SS	UCPA206-30M-SS	29
53206AR	UCPA206-30M-CEC	28
53206AR/SS	UCPA206-30M-SS-CEC	29
53206CG	UCP206-30M-NC	26
53206CG/SS	UCP206-30M-SS-NC	27
53206CGA	UCPA206-30M-NC	30
53206CGA/SS	UCPA206-30M-SS-NC	31
53206CGAR	UCPA206-30M-NC-CEC	30
53206CGAR/SS	UCPA206-30M-SS-NC-CEC	31
53206CGR	UCP206-30M-NC-CEC	26
53206CGR/SS	UCP206-30M-SS-NC-CEC	27
53206R	UCP206-30M-CEC	24
53206R/SS	UCP206-30M-SS-CEC	25
53207	UCP207-35M	24
53207/SS	UCP207-35M-SS	25
53207CG	UCP207-35M-NC	26
53207CG/SS	UCP207-35M-SS-NC	27
53207CGR	UCP207-35M-NC-CEC	26
53207CGR/SS	UCP207-35M-SS-NC-CEC	27
53207R	UCP207-35M-CEC	24
53207R/SS	UCP207-35M-SS-CEC	25
53208	UCP208-40M	24

Part ID and Part Description Cross Reference Cont.

Part ID	Part Description	Page
53208/SS	UCP208-40M-SS	25
53208CG	UCP208-40M-NC	26
53208CG/SS	UCP208-40M-SS-NC	27
53208CGR	UCP208-40M-NC-CEC	26
53208CGR/SS	UCP208-40M-SS-NC-CEC	27
53208R	UCP208-40M-CEC	24
53208R/SS	UCP208-40M-SS-CEC	25
54204CG/SS-EC	UCFH204-20M-SS-NC	17
54204CG-EC	UCFH204-20M-NC	16
54204CGR/SS-EC	UCFH204-20M-SS-NC-CEC	17
54204CGR-EC	UCFH204-20M-NC-CEC	16
54204N/SS-EC	UCFH204-20M-SS	15
54204N-EC	UCFH204-20M	14
54204NR/SS-EC	UCFH204-20M-SS-CEC	15
54204NR-EC	UCFH204-20M-CEC	14
54205CG/SS-EC	UCFH205-25M-SS-NC	17
54205CG-EC	UCFH205-25M-NC	16
54205CGR/SS-EC	UCFH205-25M-SS-NC-CEC	17
54205CGR-EC	UCFH205-25M-NC-CEC	16
54205N/SS-EC	UCFH205-25M-SS	15
54205N-EC	UCFH205-25M	14
54205NR/SS-EC	UCFH205-25M-SS-CEC	15
54205NR-EC	UCFH205-25M-CEC	14
54206CG/SS-EC	UCFH206-30M-SS-NC	17
54206CG-EC	UCFH206-30M-NC	16
54206CGR/SS-EC	UCFH206-30M-SS-NC-CEC	17
54206CGR-EC	UCFH206-30M-NC-CEC	16
54206N/SS-EC	UCFH206-30M-SS	15
54206N-EC	UCFH206-30M	14
54206NR/SS-EC	UCFH206-30M-SS-CEC	15
54206NR-EC	UCFH206-30M-CEC	14
54207CG/SS-EC	UCFH207-35M-SS-NC	17
54207CG-EC	UCFH207-35M-NC	16
54207CGR/SS-EC	UCFH207-35M-SS-NC-CEC	17
54207CGR-EC	UCFH207-35M-NC-CEC	16
54207N/SS-EC	UCFH207-35M-SS	15
54207N-EC	UCFH207-35M	14
54207NR/SS-EC	UCFH207-35M-SS-CEC	15
54207NR-EC	UCFH207-35M-CEC	14
54208CG/SS-EC	UCFH208-40M-SS-NC	17
54208CG-EC	UCFH208-40M-NC	16
54208CGR/SS-EC	UCFH208-40M-SS-NC-CEC	17
54208CGR-EC	UCFH208-40M-NC-CEC	16
54208N/SS-EC	UCFH208-40M-SS	15
54208N-EC	UCFH208-40M	14
54208NR/SS-EC	UCFH208-40M-SS-CEC	15
54208NR-EC	UCFH208-40M-CEC	14
55204CGR/SS-EC	UCFQ204-20M-SS-NC-OEC	13
55204CGR-EC	UCFQ204-20M-NC-OEC	12
55204VR/SS-EC	UCFQ204-20M-SS-OEC	11
55204VR-EC	UCFQ204-20M-OEC	10
55205CGR/SS-EC	UCFQ205-25M-SS-NC-OEC	13
55205CGR-EC	UCFQ205-25M-NC-OEC	12
55205VR/SS-EC	UCFQ205-25M-SS-OEC	11
55205VR-EC	UCFQ205-25M-OEC	10
55206CGR/SS-EC	UCFQ206-30M-SS-NC-OEC	13
55206CGR-EC	UCFQ206-30M-NC-OEC	12
55206VR/SS-EC	UCFQ206-30M-SS-OEC	11
55206VR-EC	UCFQ206-30M-OEC	10
55207CGR/SS-EC	UCFQ207-35M-SS-NC-OEC	13
55207CGR-EC	UCFQ207-35M-NC-OEC	12
55207VR/SS-EC	UCFQ207-35M-SS-OEC	11
55207VR-EC	UCFQ207-35M-OEC	10
55208CGR/SS-EC	UCFQ208-40M-SS-NC-OEC	13

Part ID	Part Description	Page
55208CGR-EC	UCFQ208-40M-NC-OEC	12
55208VR/SS-EC	UCFQ208-40M-SS-OEC	11
55208VR-EC	UCFQ208-40M-OEC	10
57205CGFR	UCFB205-25M-NC-OEC	20
57205CGFR/SS	UCFB205-25M-SS-NC-OEC	21
57205CGFRA	UCFBZ204-20M-NC-OEC	20
57205CGFRA/SS	UCFBZ204-20M-SS-NC-OEC	21
57205FR	UCFB205-25M-OEC	18
57205FR/SS	UCFB205-25M-SS-OEC	19
57205FRA	UCFBZ204-20M-OEC	18
57205FRA/SS	UCFBZ204-20M-SS-OEC	19
57205GR	UCFG205-25M-OEC	22
57205GR/SS	UCFG205-25M-SS-OEC	23
57206CGFR	UCFB206-30M-NC-OEC	20
57206CGFR/SS	UCFB206-30M-SS-NC-OEC	21
57206FR	UCFB206-30M-OEC	18
57206FR/SS	UCFB206-30M-SS-OEC	19
57206GR	UCFG206-30M-OEC	22
57206GR/SS	UCFG206-30M-SS-OEC	23
58204AR	UCPA204-20M-OEC	28
58204AR/SS	UCPA204-20M-SS-OEC	29
58204CGAR	UCPA204-20M-NC-OEC	30
58204CGAR/SS	UCPA204-20M-SS-NC-OEC	31
58204CGR	UCP204-20M-NC-OEC	26
58204CGR/SS	UCP204-20M-SS-NC-OEC	27
58204R	UCP204-20M-OEC	24
58204R/SS	UCP204-20M-SS-OEC	25
58205AR	UCPA205-25M-OEC	28
58205AR/SS	UCPA205-25M-SS-OEC	29
58205CGAR	UCPA205-25M-NC-OEC	30
58205CGAR/SS	UCPA205-25M-SS-NC-OEC	31
58205CGR	UCP205-25M-NC-OEC	26
58205CGR/SS	UCP205-25M-SS-NC-OEC	27
58205R	UCP205-25M-OEC	24
58205R/SS	UCP205-25M-SS-OEC	25
58206AR	UCPA206-30M-OEC	28
58206AR/SS	UCPA206-30M-SS-OEC	29
58206CGAR	UCPA206-30M-NC-OEC	30
58206CGAR/SS	UCPA206-30M-SS-NC-OEC	31
58206CGR	UCP206-30M-NC-OEC	26
58206CGR/SS	UCP206-30M-SS-NC-OEC	27
58206R	UCP206-30M-OEC	24
58206R/SS	UCP206-30M-SS-OEC	25
58207CGR	UCP207-35M-NC-OEC	26
58207CGR/SS	UCP207-35M-SS-NC-OEC	27
58207R	UCP207-35M-OEC	24
58207R/SS	UCP207-35M-SS-OEC	25
58208CGR	UCP208-40M-NC-OEC	26
58208CGR/SS	UCP208-40M-SS-NC-OEC	27
58208R	UCP208-40M-OEC	24
58208R/SS	UCP208-40M-SS-OEC	25
59204CGR/SS-EC	UCFH204-20M-SS-NC-OEC	17
59204CGR-EC	UCFH204-20M-NC-OEC	16
59204NR/SS-EC	UCFH204-20M-SS-OEC	15
59204NR-EC	UCFH204-20M-OEC	14
59205CGR/SS-EC	UCFH205-25M-SS-NC-OEC	17
59205CGR-EC	UCFH205-25M-NC-OEC	16
59205NR/SS-EC	UCFH205-25M-SS-OEC	15
59205NR-EC	UCFH205-25M-OEC	14
59206CGR/SS-EC	UCFH206-30M-SS-NC-OEC	17
59206CGR-EC	UCFH206-30M-NC-OEC	16
59206NR/SS-EC	UCFH206-30M-SS-OEC	15
59206NR-EC	UCFH206-30M-OEC	14
59207CGR/SS-EC	UCFH207-35M-SS-NC-OEC	17

Part ID	Part Description	Page
59207CGR-EC	UCFH207-35M-NC-OEC	16
59207NR/SS-EC	UCFH207-35M-SS-OEC	15
59207NR-EC	UCFH207-35M-OEC	14
59208CGR/SS-EC	UCFH208-40M-SS-NC-OEC	17
59208CGR-EC	UCFH208-40M-NC-OEC	16
59208NR/SS-EC	UCFH208-40M-SS-OEC	15
59208NR-EC	UCFH208-40M-OEC	14
700206CG/SS-EC	UCFQ206-20-SS-NC	13
700206CG-EC	UCFQ206-20-NC	12
700206CGR/SS-EC	UCFQ206-20-SS-NC-CEC	13
700206CGR-EC	UCFQ206-20-NC-CEC	12
700207CG/SS-EC	UCFQ207-20-SS-NC	13
700207CG-EC	UCFQ207-20-NC	12
70204CG/SS-EC	UCFQ204-12-SS-NC	13
70204CG-EC	UCFQ204-12-NC	12
70204CGR/SS-EC	UCFQ204-12-SS-NC-CEC	13
70204CGR-EC	UCFQ204-12-NC-CEC	12
70204V/SS-EC	UCFQ204-12-SS	11
70204V-EC	UCFQ204-12	10
70204VR/SS-EC	UCFQ204-12-SS-CEC	11
70204VR-EC	UCFQ204-12-CEC	10
70205CG/SS-EC	UCFQ205-16-SS-NC	13
70205CG-EC	UCFQ205-16-NC	12
70205CGR/SS-EC	UCFQ205-16-SS-NC-CEC	13
70205CGR-EC	UCFQ205-16-NC-CEC	12
70205V/SS-EC	UCFQ205-16-SS	11
70205V-EC	UCFQ205-16	10
70205VR/SS-EC	UCFQ205-16-SS-CEC	11
70205VR-EC	UCFQ205-16-CEC	10
70206CG/SS-EC	UCFQ206-19-SS-NC	13
70206CG-EC	UCFQ206-19-NC	12
70206CGR/SS-EC	UCFQ206-19-SS-NC-CEC	13
70206CGR-EC	UCFQ206-19-NC-CEC	12
70206V/SS-EC	UCFQ206-19-SS	11
70206VA/SS-EC	UCFQ206-20-SS	11
70206VA-EC	UCFQ206-20	10
70206V-EC	UCFQ206-19	10
70206VR/SS-EC	UCFQ206-19-SS-CEC	11
70206VRA/SS-EC	UCFQ206-20-SS-CEC	11
70206VRA-EC	UCFQ206-20-CEC	10
70206VR-EC	UCFQ206-19-CEC	10
70207CG/SS-EC	UCFQ207-23-SS-NC	13
70207CG-EC	UCFQ207-23-NC	12
70207CGR/SS-EC	UCFQ207-23-SS-NC-CEC	13
70207CGR-EC	UCFQ207-23-NC-CEC	12
70207V/SS-EC	UCFQ207-23-SS	11
70207VA/SS-EC	UCFQ207-20-SS	11
70207VA-EC	UCFQ207-20	10
70207V-EC	UCFQ207-23	10
70207VR/SS-EC	UCFQ207-23-SS-CEC	11
70207VR-EC	UCFQ207-23-CEC	10
70208CG/SS-EC	UCFQ208-24-SS-NC	13
70208CG-EC	UCFQ208-24-NC	12
70208CGR/SS-EC	UCFQ208-24-SS-NC-CEC	13
70208CGR-EC	UCFQ208-24-NC-CEC	12
70208V/SS-EC	UCFQ208-24-SS	11
70208V-EC	UCFQ208-24	10
70208VR/SS-EC	UCFQ208-24-SS-CEC	11
70208VR-EC	UCFQ208-24-CEC	10
720206CGF	UCFB206-20-NC	20
720206CGF/SS	UCFB206-20-SS-NC	21
720206CGFR	UCFB206-20-NC-CEC	20
720206CGFR/SS	UCFB206-20-SS-NC-CEC	21
720206F	UCFB206-20	18

Part ID	Part Description	Page
720206F/SS	UCFB206-20-SS	19
720206FR	UCFB206-20-CEC	18
720206FR/SS	UCFB206-20-SS-CEC	19
72205CGF	UCFB205-16-NC	20
72205CGF/SS	UCFB205-16-SS-NC	21
72205CGFA	UCFBZ204-12-NC	20
72205CGFA/SS	UCFBZ204-12-SS-NC	21
72205CGFR	UCFB205-16-NC-CEC	20
72205CGFR/SS	UCFB205-16-SS-NC-CEC	21
72205CGFRA	UCFBZ204-12-NC-CEC	20
72205CGFRA/SS	UCFBZ204-12-SS-NC-CEC	21
72205F	UCFB205-16	18
72205F/SS	UCFB205-16-SS	19
72205FA	UCFBZ204-12	18
72205FA/SS	UCFBZ204-12-SS	19
72205FR	UCFB205-16-CEC	18
72205FR/SS	UCFB205-16-SS-CEC	19
72205FRA	UCFBZ204-12-CEC	18
72205FRA/SS	UCFBZ204-12-SS-CEC	19
72205G	UCFG205-16	22
72205G/SS	UCFG205-16-SS	23
72205GR	UCFG205-16-CEC	22
72205GR/SS	UCFG205-16-SS-CEC	23
72206CGF	UCFB206-19-NC	20
72206CGF/SS	UCFB206-19-SS-NC	21
72206CGFR	UCFB206-19-NC-CEC	20
72206CGFR/SS	UCFB206-19-SS-NC-CEC	21
72206F	UCFB206-19	18
72206F/SS	UCFB206-19-SS	19
72206FR	UCFB206-19CEC	18
72206FR/SS	UCFB206-19-SS-CEC	19
72206G	UCFG206-19	22
72206G	UCFG206-19	22
72206G/SS	UCFG206-19-SS	23
72206GA	UCFG206-20	22
72206GA/SS	UCFG206-20-SS	23
72206GR	UCFG206-19-CEC	22
72206GR/SS	UCFG206-19-SS-CEC	23
72206GRA	UCFG206-20-CEC	22
72206GRA/SS	UCFG206-20-SS-CEC	23
730206CG	UCP206-20-NC	26
730206CG/SS	UCP206-20-SS-NC	27
730206CGA/SS-U	UCPA206-20-SS-NC	31
730206CGAR/SS-U	UCPA206-20-SS-NC-CEC	31
730206CGAR-U	UCPA206-20-NC-CEC	30
730206CGA-U	UCPA206-20-NC	30
730206CGR	UCP206-20-NC-CEC	26
730206CGR/SS	UCP206-20-SS-NC-CEC	27
730207CG	UCP207-20-NC	26
730207CG/SS	UCP207-20-SS-NC	27
73204	UCP204-12	24
73204/SS	UCP204-12-SS	25
73204B/SS-U	UCPA204-12-SS	29
73204BR/SS-U	UCPA204-12-SS-CEC	29
73204BR-U	UCPA204-12-CEC	28
73204B-U	UCPA204-12	28
73204CG	UCP204-12-NC	26
73204CG/SS	UCP204-12-SS-NC	27
73204CGA/SS-U	UCPA204-12-SS-NC	31
73204CGAR/SS-U	UCPA204-12-SS-NC-CEC	31
73204CGAR-U	UCPA204-12-NC-CEC	30
73204CGA-U	UCPA204-12-NC	30
73204CGR	UCP204-12-NC-CEC	26
73204CGR/SS	UCP204-12-SS-NC-CEC	27

Part ID and Part Description Cross Reference Cont.

Part ID	Part Description	Page
73204R	UCP204-12-CEC	24
73204R/SS	UCP204-12-SS-CEC	25
73205	UCP205-16	24
73205/SS	UCP205-16-SS	25
73205B/SS-U	UCPA205-16-SS	29
73205BR/SS-U	UCPA205-16-SS-CEC	29
73205BR-U	UCPA205-16-CEC	28
73205B-U	UCPA205-16	28
73205CG	UCP205-16-NC	26
73205CG/SS	UCP205-16-SS-NC	27
73205CGA/SS-U	UCPA205-16-SS-NC	31
73205CGAR/SS-U	UCPA205-16-SS-NC-CEC	31
73205CGAR-U	UCPA205-16-NC-CEC	30
73205CGA-U	UCPA205-16-NC	30
73205CGR	UCP205-16-NC-CEC	26
73205CGR/SS	UCP205-16-SS-NC-CEC	27
73205R	UCP205-16-CEC	24
73205R/SS	UCP205-16-SS-CEC	25
73206	UCP206-19	24
73206/SS	UCP206-19-SS	25
73206A	UCP206-20	24
73206A/SS	UCP206-20-SS	25
73206B/SS-U	UCPA206-19-SS	29
73206BA/SS-U	UCPA206-20-SS	29
73206BAR/SS-U	UCPA206-20-SS-CEC	29
73206BAR-U	UCPA206-20-CEC	28
73206BA-U	UCPA206-20	28
73206BR/SS-U	UCPA206-19-SS-CEC	29
73206BR-U	UCPA206-19-CEC	28
73206B-U	UCPA206-19	28
73206CG	UCP206-19-NC	26
73206CG/SS	UCP206-19-SS-NC	27
73206CGA/SS-U	UCPA206-19-SS-NC	31
73206CGAR/SS-U	UCPA206-19-SS-NC-CEC	31
73206CGAR-U	UCPA206-19-NC-CEC	30
73206CGA-U	UCPA206-19-NC	30
73206CGR	UCP206-19-NC-CEC	26
73206CGR/SS	UCP206-19-SS-NC-CEC	27
73206R	UCP206-19-CEC	24
73206R/SS	UCP206-19-SS-CEC	25
73206RA	UCP206-20-CEC	24
73206RA/SS	UCP206-20-SS-CEC	25
73207	UCP207-23	24
73207/SS	UCP207-23-SS	25
73207A	UCP207-20	24
73207A/SS	UCP207-20-SS	25
73207CG	UCP207-23-NC	26
73207CG/SS	UCP207-23-SS-NC	27
73207CGR	UCP207-23-NC-CEC	26
73207CGR/SS	UCP207-23-SS-NC-CEC	27
73207R	UCP207-23-CEC	24
73207R/SS	UCP207-23-SS-CEC	25
73208	UCP208-24	24
73208/SS	UCP208-24-SS	25
73208CG	UCP208-24-NC	26
73208CG/SS	UCP208-24-SS-NC	27
73208CGR	UCP208-24-NC-CEC	26
73208CGR/SS	UCP208-24-SS-NC-CEC	27
73208R	UCP208-24-CEC	24
73208R/SS	UCP208-24-SS-CEC	25
740206CG/SS-EC	UCFH206-20-SS-NC	17
740206CG-EC	UCFH206-20-NC	16
740206CGR/SS-EC	UCFH206-20-SS-NC-CEC	17
740206CGR-EC	UCFH206-20-NC-CEC	16

Part ID	Part Description	Page
740207CG/SS-EC	UCFH207-20-SS-NC	17
740207CG-EC	UCFH207-20-NC	16
74204CG/SS-EC	UCFH204-12-SS-NC	17
74204CG-EC	UCFH204-12-NC	16
74204CGR/SS-EC	UCFH204-12-SS-NC-CEC	17
74204CGR-EC	UCFH204-12-NC-CEC	16
74204N/SS-EC	UCFH204-12-SS	15
74204N-EC	UCFH204-12	14
74204NR/SS-EC	UCFH204-12-SS-CEC	15
74204NR-EC	UCFH204-12-CEC	14
74205CG/SS-EC	UCFH205-16-SS-NC	17
74205CG-EC	UCFH205-16-NC	16
74205CGR/SS-EC	UCFH205-16-SS-NC-CEC	17
74205CGR-EC	UCFH205-16-NC-CEC	16
74205N/SS-EC	UCFH205-16-SS	15
74205N-EC	UCFH205-16	14
74205NR/SS-EC	UCFH205-16-SS-CEC	15
74205NR-EC	UCFH205-16-CEC	14
74206CG/SS-EC	UCFH206-19-SS-NC	17
74206CG-EC	UCFH206-19-NC	16
74206CGR/SS-EC	UCFH206-19-SS-NC-CEC	17
74206CGR-EC	UCFH206-19-NC-CEC	16
74206N/SS-EC	UCFH206-19-SS	15
74206NA/SS-EC	UCFH206-20-SS	15
74206NA-EC	UCFH206-20	14
74206N-EC	UCFH206-19	14
74206NR/SS-EC	UCFH206-19-SS-CEC	15
74206NRA/SS-EC	UCFH206-20-SS-CEC	15
74206NRA-EC	UCFH206-20-CEC	14
74206NR-EC	UCFH206-19-CEC	14
74207CG/SS-EC	UCFH207-23-SS-NC	17
74207CG-EC	UCFH207-23-NC	16
74207CGR/SS-EC	UCFH207-23-SS-NC-CEC	17
74207CGR-EC	UCFH207-23-NC-CEC	16
74207N/SS-EC	UCFH207-23-SS	15
74207NA/SS-EC	UCFH207-20-SS	15
74207NA-EC	UCFH207-20	14
74207N-EC	UCFH207-23	14
74207NR/SS-EC	UCFH207-23-SS-CEC	15
74207NR-EC	UCFH207-23-CEC	14
74208CG/SS-EC	UCFH208-24-SS-NC	17
74208CG-EC	UCFH208-24-NC	16
74208CGR/SS-EC	UCFH208-24-SS-NC-CEC	17
74208CGR-EC	UCFH208-24-NC-CEC	16
74208N/SS-EC	UCFH208-24-SS	15
74208N-EC	UCFH208-24	14
74208NR/SS-EC	UCFH208-24-SS-CEC	15
74208NR-EC	UCFH208-24-CEC	14
750206CGR/SS-EC	UCFQ206-20-SS-NC-OEC	13
750206CGR-EC	UCFQ206-20-NC-OEC	12
75204CGR/SS-EC	UCFQ204-12-SS-NC-OEC	13
75204CGR-EC	UCFQ204-12-NC-OEC	12
75204VR/SS-EC	UCFQ204-12-SS-OEC	11
75204VR-EC	UCFQ204-12-OEC	10
75205CGR/SS-EC	UCFQ205-16-SS-NC-OEC	13
75205CGR-EC	UCFQ205-16-NC-OEC	12
75205VR/SS-EC	UCFQ205-16-SS-OEC	11
75205VR-EC	UCFQ205-16-OEC	10
75206CGR/SS-EC	UCFQ206-19-SS-NC-OEC	13
75206CGR-EC	UCFQ206-19-NC-OEC	12
75206VR/SS-EC	UCFQ206-19-SS-OEC	11
75206VRA/SS-EC	UCFQ206-20-SS-OEC	11
75206VRA-EC	UCFQ206-20-OEC	10
75206VR-EC	UCFQ206-19-OEC	10

Part ID	Part Description	Page
75207CGR/SS-EC	UCFQ207-23-SS-NC-OEC	13
75207CGR-EC	UCFQ207-23-NC-OEC	12
75207VR/SS-EC	UCFQ207-23-SS-OEC	11
75207VR-EC	UCFQ207-23-OEC	10
75208CGR/SS-EC	UCFQ208-24-SS-NC-OEC	13
75208CGR-EC	UCFQ208-24-NC-OEC	12
75208VR/SS-EC	UCFQ208-24-SS-OEC	11
75208VR-EC	UCFQ208-24-OEC	10
770206CGFR	UCFB206-20-NC-OEC	20
770206CGFR/SS	UCFB206-20-SS-NC-OEC	21
770206FR	UCFB206-20-OEC	18
770206FR/SS	UCFB206-20-SS-OEC	19
77205CGFR	UCFB205-16-NC-OEC	20
77205CGFR/SS	UCFB205-16-SS-NC-OEC	21
77205CGFRA	UCFBZ204-12-NC-OEC	20
77205CGFRA/SS	UCFBZ204-12-SS-NC-OEC	21
77205FR	UCFB205-16-OEC	18
77205FR/SS	UCFB205-16-SS-OEC	19
77205FRA	UCFBZ204-12-OEC	18
77205FRA/SS	UCFBZ204-12-SS-OEC	19
77205GR	UCFG205-16-OEC	22
77205GR/SS	UCFG205-16-SS-OEC	23
77206CGFR	UCFB206-19-NC-OEC	20
77206CGFR/SS	UCFB206-19-SS-NC-OEC	21
77206FR	UCFB206-19-OEC	18
77206FR/SS	UCFB206-19-SS-OEC	19
77206GR	UCFG206-19-OEC	22
77206GR/SS	UCFG206-19-SS-OEC	23
77206GRA	UCFG206-20-OEC	22
77206GRA/SS	UCFG206-20-SS-OEC	23
780206CGAR/SS-U	UCPA206-20-SS-NC-OEC	31
780206CGAR-U	UCPA206-20-NC-OEC	30
780206CGR	UCP206-20-NC-OEC	26
780206CGR/SS	UCP206-20-SS-NC-OEC	27
78204BR/SS-U	UCPA204-12-SS-OEC	29
78204BR-U	UCPA204-12-OEC	28
78204CGAR/SS-U	UCPA204-12-SS-NC-OEC	31
78204CGAR-U	UCPA204-12-NC-OEC	30
78204CGR	UCP204-12-NC-OEC	26
78204CGR/SS	UCP204-12-SS-NC-OEC	27
78204R	UCP204-12-OEC	24
78204R/SS	UCP204-12-SS-OEC	25
78205BR/SS-U	UCPA205-16-SS-OEC	29
78205BR-U	UCPA205-16-OEC	28
78205CGAR/SS-U	UCPA205-16-SS-NC-OEC	31
78205CGAR-U	UCPA205-16-NC-OEC	30
78205CGR	UCP205-16-NC-OEC	26
78205CGR/SS	UCP205-16-SS-NC-OEC	27
78205R	UCP205-16-OEC	24
78205R/SS	UCP205-16-SS-OEC	25
78206BAR/SS-U	UCPA206-20-SS-OEC	29
78206BAR-U	UCPA206-20-OEC	28
78206BR/SS-U	UCPA206-19-SS-OEC	29
78206BR-U	UCPA206-19-OEC	28
78206CGAR/SS-U	UCPA206-19-SS-NC-OEC	31
78206CGAR-U	UCPA206-19-NC-OEC	30
78206CGR	UCP206-19-NC-OEC	26
78206CGR/SS	UCP206-19-SS-NC-OEC	27
78206R	UCP206-19-OEC	24
78206R/SS	UCP206-19-SS-OEC	25
78206RA	UCP206-20-OEC	24
78206RA/SS	UCP206-20-SS-OEC	25
78207CGR	UCP207-23-NC-OEC	26
78207CGR/SS	UCP207-23-SS-NC-OEC	27

Part ID	Part Description	Page
78207R	UCP207-23-OEC	24
78207R/SS	UCP207-23-SS-OEC	25
78208CGR	UCP208-24-NC-OEC	26
78208CGR/SS	UCP208-24-SS-NC-OEC	27
78208R	UCP208-24-OEC	24
78208R/SS	UCP208-24-SS-OEC	25
790206CGR/SS-EC	UCFH206-20-SS-NC-OEC	17
790206CGR-EC	UCFH206-20-NC-OEC	16
79204CGR/SS-EC	UCFH204-12-SS-NC-OEC	17
79204CGR-EC	UCFH204-12-NC-OEC	16
79204NR/SS-EC	UCFH204-12-SS-OEC	15
79204NR-EC	UCFH204-12-OEC	14
79205CGR/SS-EC	UCFH205-16-SS-NC-OEC	17
79205CGR-EC	UCFH205-16-NC-OEC	16
79205NR/SS-EC	UCFH205-16-SS-OEC	15
79205NR-EC	UCFH205-16-OEC	14
79206CGR/SS-EC	UCFH206-19-SS-NC-OEC	17
79206CGR-EC	UCFH206-19-NC-OEC	16
79206NR/SS-EC	UCFH206-19-SS-OEC	15
79206NRA/SS-EC	UCFH206-20-SS-OEC	15
79206NRA-EC	UCFH206-20-OEC	14
79206NR-EC	UCFH206-19-OEC	14
79207CGR/SS-EC	UCFH207-23-SS-NC-OEC	17
79207CGR-EC	UCFH207-23-NC-OEC	16
79207NR/SS-EC	UCFH207-23-SS-OEC	15
79207NR-EC	UCFH207-23-OEC	14
79208CGR/SS-EC	UCFH208-24-SS-NC-OEC	17
79208CGR-EC	UCFH208-24-NC-OEC	16
79208NR/SS-EC	UCFH208-24-SS-OEC	15
79208NR-EC	UCFH208-24-OEC	14

All sales are made on our STANDARD TERMS AND CONDITIONS OF SALE in effect at the time a customer's order is accepted. The current Terms and Conditions are set forth below:

STANDARD TERMS AND CONDITIONS OF SALE (October 25, 2012)

These Terms and Conditions, the attendant quotation or acknowledgment and all documents incorporated by specific reference therein, will be the complete and exclusive statement of the terms of the agreement governing the sale of goods ("Goods") by **Emerson Power Transmission Corporation** and its divisions and subsidiaries ("Seller") to Customer ("Buyer"). Buyer's acceptance of the Goods will manifest Buyer's assent to these Terms and Conditions. If these Terms and Conditions differ in any way from the terms a nd conditions of Buyer's order, or other documentation, this document will be construed as a counteroffer and will not be deemed an acceptance of Buyer's terms and conditions which conflict herewith.

1. PRICES: Unless otherwise specified in writing by Seller, Seller's price for the goods shall remain in effect for thirty (30) days after the date of Seller's quotation or acknowledgment of Buyer's order for the Goods, whichever occurs first, provided an unconditional, complete authorization for the immediate shipment of the Goods is received and accepted by Seller within such time period. If such authorization is not received by Seller within such thirty (30) day period, Seller shall have the right to change the price for the Good to Seller's price for the Goods at the time of shipment.

2. TAXES: Any tax or governmental charge or increase in same hereafter becoming effective increasing the cost to Seller of producing, selling or delivering the Goods or of procuring material used therein, and any tax now in effect or increase in same payable by the Seller because of the manufacture, sale or delivery of the Goods, may at Seller's option, be added to the price.

3. TERMS OF PAYMENT: Subject to the approval of Seller's Credit Department, terms are net thirty (30) days from date of Seller's invoice in U.S. currency. If any payment owed to Seller is not paid when due, it shall bear interest, at a rate to be determined by Seller, which shall not exceed the maximum rate permitted by law, from the date on which it is due until it is paid. Seller shall have the right, among other remedies, either to terminate the Agreement or to suspend further performance under this and/or other agreements with Buyer in the event Buyer fails to make any payment when due. Buyer shall be liable for all expenses, including attorneys' fees, relating to the collection of past due amounts.

4. SHIPMENT AND DELIVERY: Shipments are made F.O.B. Seller's shipping point. Any claims for shortages or damages suffered in transit shall be submitted by the Buyer directly to the carrier. While Seller will use all reasonable commercial efforts to maintain the delivery date acknowledged or quoted by Seller, all shipping dates are approximate. Seller reserves the right to make partial shipments and to segregate "specials" and made-to-order Goods from normal stock Goods. Seller shall not be bound to tender delivery of any Goods for which Buyer has not provided shipping instructions.

5. QUANTITY: Buyer agrees to accept overruns of up to ten percent (10%) of the order on "made-to-order" Goods, including parts. Any such additional items shall be priced at the price per item charged for the specific quantity ordered.

6. LIMITED WARRANTY: Subject to the limitations of Section 7, Seller warrants that the Goods will be free from defects in material and workmanship under normal use, service and maintenance for a period of one year (unless otherwise specified by Seller in writing) from the date of shipment of the Goods by Seller. **THIS IS THE SOLE AND EXCLUSIVE WARRANTY GIVEN BY SELLER WITH RESPECT TO THE GOODS AND IS IN LIEU OF AND EXCLUDES ALL OTHER WARRANTIES, EXPRESS OR IMPLIED, ARISING BY OPERATION OF LAW OR OTHERWISE, INCLUDING WITHOUT LIMITATION, MERCHANTABILITY OR FITNESS FOR A PARTICULAR PURPOSE WHETHER OR NOT THE PURPOSE OR USE HAS BEEN DISCLOSED TO SELLER IN SPECIFICATIONS, DRAWINGS OR OTHERWISE, AND WHETHER OR NOT SELLER'S PRODUCTS ARE SPECIFICALLY DESIGNED AND/OR MANUFACTURED BY SELLER FOR BUYER'S USE OR PURPOSE.**

This warranty does not extend to any losses or damages due to misuse, accident, abuse, neglect, normal wear and tear, unauthorized modification or alteration, use beyond rated capacity, or improper installation, maintenance or application. To the extent that Buyer or its agents has supplied specifications, information, representation of operating conditions or other data to Seller in the selection or design of the Goods and the preparation of Seller's quotation, and in the event that actual operating conditions or other conditions differ from those represented by Buyer, any warranties or other provisions contained herein which are affected by such conditions shall be null and void. If within thirty (30) days after Buyer's discovery of any warranty defects within the warranty period, Buyer notifies Seller thereof in writing, Seller shall, at its option, repair or replace F.O.B. point of manufacture, or refund the purchase price for, that portion of the goods found by Seller to be defective. Failure by Buyer to give such written notice within the applicable time period shall be deemed an absolute and unconditional waiver of Buyer's claim for such defects. Goods repaired or replaced during the warranty period shall be covered by the foregoing warranty for the remainder of the original warranty period or ninety (90) days, whichever is longer. Buyer assumes all other responsibility for any loss, damage, or injury to persons or property arising out of, connected with, or resulting from the use of Goods, either alone or in combination with other products/components.

SECTIONS 6 AND 7 APPLY TO ANY ENTITY OR PERSON WHO MAY BUY, ACQUIRE OR USE SELLER'S GOODS, INCLUDING ANY ENTITY OR PERSON WHO BUYS THE GOODS FROM SELLER'S DISTRIBUTOR AND SUCH ENTITY OR PERSON SHALL BE BOUND BY THE LIMITATIONS THEREIN.

7. LIMITATION OF REMEDY AND LIABILITY: **THE SOLE AND EXCLUSIVE REMEDY FOR BREACH OF ANY WARRANTY HEREUNDER (OTHER THAN THE WARRANTY PROVIDED UNDER SECTION 13) SHALL BE LIMITED TO REPAIR, REPLACEMENT OR REFUND OF THE PURCHASE PRICE UNDER SECTION 6. SELLER SHALL NOT BE LIABLE FOR DAMAGES CAUSED BY DELAY IN PERFORMANCE AND IN NO EVENT, REGARDLESS OF THE FORM OF THE CLAIM OR CAUSE OF ACTION (WHETHER BASED IN CONTRACT, INFRINGEMENT, NEGLIGENCE, STRICT LIABILITY, OTHER TORT OR OTHERWISE), SHALL SELLER'S LIABILITY TO BUYER AND/OR ITS CUSTOMERS EXCEED THE PRICE TO BUYER OF THE SPECIFIC GOODS PROVIDED BY SELLER GIVING RISE TO THE CLAIM OR CAUSE OF ACTION. BUYER AGREES THAT IN NO EVENT SHALL SELLER'S LIABILITY TO BUYER AND/OR ITS CUSTOMERS EXTEND TO INCLUDE INCIDENTAL, CONSEQUENTIAL OR PUNITIVE DAMAGES. THE TERM "CONSEQUENTIAL DAMAGES" SHALL INCLUDE, BUT NOT BE LIMITED TO, LOSS OF ANTICIPATED PROFITS, LOSS OF USE, LOSS OF REVENUE, COST OF CAPITAL AND DAMAGE OR LOSS OF OTHER PROPERTY OR EQUIPMENT.**

It is expressly understood that any technical advice furnished by Seller with respect to the use of the Goods is given without charge, and Seller assumes no obligation or liability for the advice given, or results obtained, all such advice being given and accepted at Buyer's risk. **GOODS AND/OR SERVICES SOLD HEREUNDER ARE NOT FOR USE IN ANY NUCLEAR AND RELATED APPLICATIONS.** Buyer accepts goods and/or services with the foregoing understanding, agrees to communicate the same in writing to any subsequent purchaser or users and to defend, indemnify and hold harmless Seller from any claims, losses, suits, judgments and damages, including incidental and consequential damages, arising from such use, whether the cause of action be based in tort, contract or otherwise, including allegations that the Seller's liability is based on negligence or strict liability.

8. EXCUSE OF PERFORMANCE: Seller shall not be liable for delays in performance or for non-performance due to acts of God, acts of Buyer, war, riot, fire, flood, other severe weather, sabotage, or epidemics; strikes or labor disturbances; governmental requests, restrictions, laws, regulations, orders or actions; unavailability of or delays in transportation; default of suppliers; or unforeseen circumstances or any events or causes beyond Seller's reasonable control. Deliveries may be suspended for an appropriate period of time as a result of the foregoing. If Seller determines that its ability to supply the total demand for the Goods, or to obtain material used directly or indirectly in the manufacture of the Goods, is hindered, limited or made impracticable due to causes addressed in this Section 8, Seller may allocate its available supply of the Goods or such material (without obligation to acquire other supplies of any such Goods or material) among itself and its purchasers on such basis as Seller determines to be equitable without liability for any failure of performance which may result therefrom. Deliveries suspended or not made by reason of this section may be canceled by Seller upon notice to Buyer without liability, but the balance of the agreement shall otherwise remain unaffected.

9. CANCELLATIONS AND DELAYS: The Buyer may cancel orders only upon written notice and upon payment to Seller of cancellation charges which include, among other things, all costs and expenses incurred and commitments made by the Seller and a reasonable profit thereon. Any request by Buyer to extend the delivery schedule must be agreed to in writing by the Seller. If agreement cannot be reached, Seller may deliver product to the last known ship to address and invoice the Buyer upon completion of the product or prior delivery date, whichever is later.

10. CHANGES: Buyer may request changes or additions to the Goods consistent with Seller's specifications and criteria. In the event such changes or additions are accepted by Seller, Seller may revise the price and delivery schedule. Seller reserves the right to change designs and specifications for the Goods without prior notice to Buyer, except with respect to Goods being made-to-order for Buyer.

11. TOOLING: Tool, die, and pattern charges, if any, are in addition to the price of the Goods and are due and payable upon completion of the tooling. All such tools, dies and patterns shall be and remain the property of Seller. Charges for tools, dies, and patterns do not convey to Buyer, title, ownership interests in, or rights to possession or removal, nor prevent their use by Seller for other purchasers, except as otherwise expressly provided by Seller and Buyer in writing with reference to this provision.

12. ASSIGNMENT: Buyer shall not assign its rights or delegate its duties hereunder or any interest therein or any rights hereunder without the prior written consent of the Seller, and any such assignment, without such consent, shall be void.

13. PATENTS AND COPYRIGHTS: Subject to Section 7, Seller warrants that the Goods sold, except as are made specifically for Buyer according to Buyer's specifications, do not infringe any valid U.S. patent or copyright in existence as of the date of delivery. This warranty is given upon the condition that Buyer promptly notify Seller of any claim or suit involving Buyer in which such infringement is alleged, and, that Buyer cooperate fully with Seller and permit Seller to control completely the defense or compromise of any such allegation of infringement. Seller's warranty as to use only applies to infringements arising solely out of the inherent operation (i) of such Goods, or (ii) of any combination of Goods in a system designed by Seller. In the event such Goods, singularly or in combination, are held to infringe a U.S. patent or copyright in such suit, and the use of such Goods is enjoined, or in the case of a compromise by Seller, Seller shall have the right, at its option and expense, to procure for Buyer the right to continue using such Goods, or replace them with non-infringing Goods; or modify same to become non-infringing; or grant Buyer a credit for the depreciated value of such Goods and accept return of them.

14. EXPORT/IMPORT: Buyer agrees that all applicable import and export control laws, regulations, orders, and requirements, including without limitation those of the United States and the European Union, and the jurisdictions in which the Seller and the Buyer are established or from which Goods may be supplied, will apply to their receipt and use. In no event shall Buyer use, transfer, release, import, or export Goods in violation of such applicable laws, regulations, orders or requirements.

15. MISCELLANEOUS: These terms and conditions set forth the entire understanding and agreement between Seller and Buyer, and supersede all other communications, negotiations and prior oral or written statements regarding the subject matter of these terms and conditions. No change, modification, rescission, discharge, abandonment, or waiver of these terms and conditions of Sale shall be binding upon the Seller unless made in writing and signed on its behalf by an officer of the Seller. No conditions, usage or trade, course of dealing or performance, understanding or agreement purporting to modify, vary, explain, or supplement these Terms and Conditions shall be binding unless hereafter made in writing and signed by the party to be bound, and no modification shall be affected by the acceptance of purchase orders or shipping instruction forms containing terms at variance with or in addition to those set forth herein. Any such modifications or additional terms are specifically rejected by Seller. No waiver by Seller with respect to any breach or default or any right or remedy and no course of dealing, shall be deemed to constitute a continuing waiver of any other breach or default or of any other right or remedy, unless such waiver be expressed in writing and signed by the party to be bound. Seller is not responsible for typographical or clerical errors made in any quotation, orders or publications. All such errors are subject to correction. The validity, performance, and all other matters relating to the interpretation and effect of this contract shall be governed by the law of the state of New York. The United Nations Convention on the International Sale of Goods shall not apply to any transaction hereunder.

SYSTEM PLAST™
Conveying Chain

SEALMASTER
Mounted Ball Bearings

Morse
Clutches

Browning
Shaft Mount Reducers

SEALMASTER
Mounted Roller Bearings

ROLLWAY
Roller Bearings

Browning
V-Belt Drives

Morse
Chain

KOP-FLEX
Couplings

JAURE
Wind Couplings

Morse
Worm Gearing

McGILL
Precision Bearings

Power Transmission Solutions™

Corporate Headquarters
7120 New Buffington Road
Florence, KY 41042

Customer Service	866 765 8744
Fax	866 447 6587
Technical Service	800 626 2093

www.powertransmissionsolutions.com

System Plast™ Bearing Supplement Catalog
MCC14002E • Form 9711E

APPLICATION CONSIDERATIONS

The proper selection and application of power transmission products and components, including the related area of product safety, is the responsibility of the customer. Operating and performance requirements and potential associated issues will vary appreciably depending upon the use and application of such products and components. The scope of the technical and application information included in this publication is necessarily limited. Unusual operating environments and conditions, lubrication requirements, loading supports, and other factors can materially affect the application and operating results of the products and components and the customer should carefully review its requirements. Any technical advice or review furnished by Emerson Power Transmission Corporation and its divisions with respect to the use of products and components is given in good faith and without charge, and Emerson assumes no obligation or liability for the advice given, or results obtained, all such advice and review being given and accepted at customer's risk.

For a copy of our Standard Terms and Conditions of Sale, Disclaimers of Warranty, Limitation of Liability and Remedy, please contact Emerson Power Transmission Customer Service at 1-800-626-2120. These terms and conditions of sale, disclaimers and limitations of liability apply to any person who may buy, acquire or use an Emerson Power Transmission Corporation product referred to herein, including any person who buys from a licensed distributor of these branded products.

Emerson Power Transmission does not warrant the accuracy of the information contained in this document. All interchanges should be compared with actual current specifications and/or manufacturing drawings. For a copy of our standard terms and conditions, contact Emerson Power Transmission at 1-800-626-2120.

Nolu and System Plast are trademarks of Emerson Electric Co. or one of its affiliated companies.
© 2014 Emerson Power Transmission Corp., All Rights Reserved.

MCC14002E • Form 9711E • Printed in USA